01 Block Diagram
02 System Setting
03 *
04 04_CPU-Merom(HOST)
05 05_CPU-Merom(PWR)
06 *
07 07_CRESTLINE(HOST)
08 08_CRESTLINE(DMI & CFG)
09 09_CRESTLINE(GRAPHIC)
10 10_CRESTLINE(DDR2)
11 11_CRESTLINE(PWR)
12 12_CRESTLINE(PWR2)
13 13_CRESTLINE(GND)
14 *
15 15_SB-ICH8M(1)
16 16_SB-ICH8M(2)
17 17_SB-ICH8M(3)
18 18_SB-ICH8M(PWR)
19 *
20 20_DDR2 SO-DIMM0
21 21_DDR2 SO-DIMM1
22 22_DDR2 TERMINATION
23 *
24 G86M(1)-PCIE
25 G86M(2)-Memory IF
26 G86M(3)-FBA_VRAM_A
27 G86M(4)-FBA_VRAM_C
28 G86M(5)-GND&Decoupling
29 G86M((6)-LVDS&VGA&TV
30 G86(7)-MIOBD&GPIO
31 G86(8)-SSC
32 CRT
33 LVDS & INVERTER CONNECTOR
34 FINGER PRINT
35 TV OUT CONN & DVI
36 *
37 THER SENSOR & FAN
38 *
39 CLOCK GEN-ICS9LPR363AGLF-T
40 *
41 Power on & Reset Freq.
42 DISCHARGE
43 *
44 LAN-L1
45 MDC & RJ45+11
46 *
47 MINI CARD-TV/Windigo
48 MINI CARD-Robson
49 MINI CARD-Kedron
50 *
51 CARD1394-R5C833(1)
52 CARD1394-R5C833(2)
53 4 in 1 CARD READER
54 NEWCARD
55 *
56 CODEC-ALC660
57 AUDIO AMP & JCAK
58 *
59 IT8511TE
60 Touch Pad & KB
61 *
62 USB CONN
63 *
64 ISA ROM
65 *
66 LED
67 *
68 DC & BAT IN
69 *
70 Debug CONN.
71 *
72 SATA-HDD & ODD
73 eSATA
74 SREW HOLE
75 *
76 TPM
77 SPRING_PAD
78 BT
79 POWER SEQUENCE
80 POWER_VCORE
81 POWER_SYSTEM
82 POWER_I/O_1.5VS & 1.05VS
83 POWER_I/O_DDR & VTT
84 POWER_I/O_+3VAO & +2.5VS
85 POWER_VGA_CORE & +1.25VS
86 POWER_+VCCFGX (Empty)
87 POWER_SHUTDOWN# (Empty)
88 POWER_CHARGER
89 POWER_PIC(Empty)
90 POWER_DETECT
91 POWER_LOAD SWITCH
92 POWER_FLOWCHART
93 POWER_PROTECT
94 POWER_SIGNAL
95 History


F3Sv/c

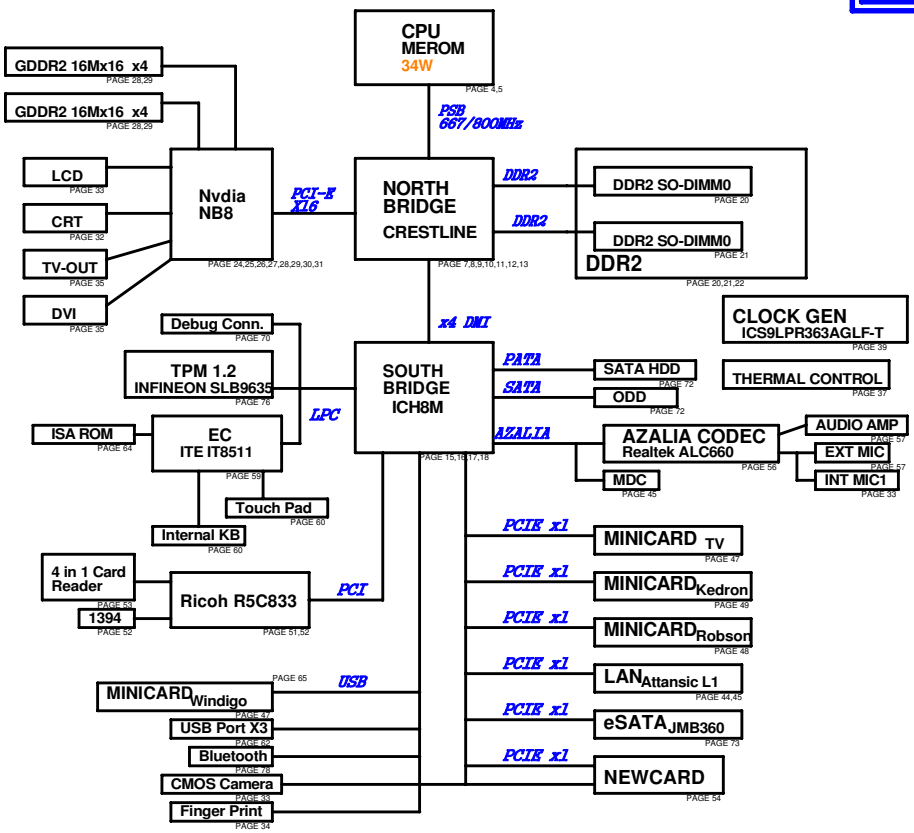


<Variant Name>

| | | | |
|---|---|---|---|
| ASUS | Title : Block Diagram | | |
| ASUSTek Computer INC. NB1 | Engineer: Gajun_Ho | | |
| Size: Custom | Project Name: F3Sc | | Rev: 2.0 |
| Date: 星期三, 二月 21, 2007 | Sheet 1 of 95 | | |


<< Kennedy_Zhang >>

GPIO9

## EC_IT8511TE SETTING

| Pin | Pin Name | Signal Name | Type |
|---|---|---|---|
| 32 | PWM0/GPA0 | / | |
| 33 | PWM1/GPA1 | FAN_PWM | O |
| 36 | PWM2/GPA2 | / | |
| 37 | PWM3/GPA3 | / | |
| 38 | PWM4/GPA4 | CHG_LED_UP# | O |
| 39 | PWM5/GPA5 | PWR_LED_UP# | O |
| 40 | PWM6/GPA6 | / | |
| 43 | PWM7/GPA7 | LCD_BACKOFF# | O |
| 153 | RXD/GPB0 | NUM_LED | O |
| 154 | TXD/GPB1 | CAP_LED | O |
| 162 | GPB2 | SCRL_LED | O |
| 163 | SMCLK0/GPB3 | SMB0_CLK | I/0 |
| 164 | SMDAT0GPB4 | SMB0_DAT | I/0 |
| 5 | GA20/GPB5 | A20GATE | O |
| 6 | KBRST#/GPB6 | RC_IN# | O |
| 165 | GPB7 | THRO_CPU | O |
| 47 | CLKOUT/GPC0 | DJ_SW# | O |
| 169 | SMCLK1/GPC1 | SMB1_CLK | I/0 |
| 170 | SMDAT1/GPC2 | SMB1_DAT | I/0 |
| 171 | GPC3 | / | |
| 172 | TMRI0/WUI2/GPC4 | ACIN_OC# | I |
| 175 | GPC5 | OP_SD# | O |
| 176 | TMRI1/WUI3/GPC6 | BAT1_IN_OC# | I |
| 1 | CK32KOUT/GPC7 | / | |
| 26 | RI1#/WUI0/GPD0 | SUSB# | I |
| 29 | RI2#/WUI1/GPD1 | SUSC# | I |
| 30 | LPCRST#/WUI4//GPD2 | BUF_PLT_RST# | I |
| 31 | ECSCI#/GPD3 | EXT_SCI# | O |
| 41 | GPD4 | RF_ON_SW# | I |
| 42 | GINT/GPD5 | PM_SLP_M# | I |
| 62 | TACH0/GPD6 | FAN0_TACH | I |
| 63 | TACH1/GPD7 | COLOREN# | O |
| 87 | ADC4/GPE0 | BT# | I |
| 88 | ADC5/GPE1 | INTERNET# | I |
| 89 | ADC6/GPE2 | MARATHON# | I |
| 90 | ADC7/GPE3 | DISTP# | I |
| 2 | PWRSW/GPE4 | PWR_SW# | I |
| 44 | WUI5/GPE5 | / | |
| 24 | LPCPD#/WUI6/GPE6 | / | |
| 25 | CLKRUN#/WUI7/GPE7 | PM_CLKRUN# | O |
| 110 | PS2CLK0/GPF0 | / | |
| 111 | PS2DAT0/GPF1 | / | |
| 114 | PS2CLK1/GPF2 | / | I/0 |
| 115 | PS2DAT1/GPF3 | / | I/0 |
| 116 | PS2CLK2/GPF4 | TP_CLK | |
| 117 | PS2DAT2/GPF5 | TP_DAT | |
| 118 | PS2CLK3/GPF6 | / | |
| 119 | PS2DAT3/GPF7 | INSTANT_ON# | I |
| 113 | FA16/GPG0 | FA16 | |
| 112 | FA17/GPG1 | FA17 | |
| 104 | FA18/GPG2 | FA18 | |
| 103 | FA19/GPG3 | FA19 | |
| 3 | FA20/GPG4 | LIDSW# | I |
| 4 | FA21/GPG5 | / | |
| 27 | LPC80HL/GPG6 | PMTHERM# | O |
| 28 | LPC80HL/GPG7 | AC_APR_UC# | I |

| Pin | Pin Name | Signal Name | Type |
|---|---|---|---|
| 8 | GPL0 | PM_S4_STATE# | I |
| 11 | GPL1 | / | |
| 12 | GPL2 | / | |
| 20 | GPL3 | / | |
| 21 | GPL4 | / | |
| 48 | GPH0 | VSUS_ON | I |
| 54 | GPH1 | SUS_PWRGD | O |
| 55 | GPH2 | VRM_PWRGD | O |
| 69 | GPH3 | PM_PWRBTN# | O |
| 70 | GPH4 | SUSC_EC# | O |
| 75 | GPH5 | / | O |
| 76 | GPH6 | CPU_VRON | O |
| 105 | GPH7 | PM_RSMRST# | O |
| 148 | GPI0 | PM_PWROK | O |
| 149 | GPI1 | ALL_SYSTEM_PWRGD | I |

| Pin | Pin Name | Signal Name | Type |
|---|---|---|---|
| 152 | GPI2 | / | |
| 155 | GPI3 | CHG_EN# | O |
| 168 | GPI5 | EC_CLK_EN | O |
| 174 | GPI6 | BAT_LEARN | O |
| 85 | KS016/GPM2 | / | O |
| 106 | GPL5 | 3G_ON# | |
| 107 | GPL6 | / | O |
| 108 | GPL7 | SUSB_EC1# | I |
| 97 | GPJ4 | CPPE#_EC | I |
| 98 | GPJ5 | PS_SHDN# | O |

| PCI Device | IDSEL# | REQ/GNT# | Interrupts |
|---|---|---|---|
| CARD READER | AD17 | 0 | A |
| 1394 | AD17 | 0 | B |

| PCIE Device | Bus | PCIE Device | Bus |
|---|---|---|---|
| LAN | PE(T/R)(p/n)1 | Robson | PE(T/R)(p/n)4 |
| Kedron | PE(T/R)(p/n)2 | NEWCARD | PE(T/R)(p/n)5 |
| eSATA | PE(T/R)(p/n)3 | GLAN | PE(T/R)(p/n)6 |

| SM-Bus Device | SM-Bus Address |
|---|---|
| Clock Generator | 1101001x ( D2 ) |
| SO-DIMM 0 | 1010000x ( A0 ) |
| SO-DIMM 1 | 1010001x ( A2 ) |
| CPU Thermal Sensor(MAX6657) | 0100110x ( 4C ) |
| VGA Thermal Sensor(MAX6649) | 0100110x ( 4C ) |

## ICH8-M GPIO SETTING

| Pin | Pin Name | Signal Name | Type |
|---|---|---|---|
| AG12 | GPIO0/BM_BUSY# | PM_BMBUSY# | I |
| AJ8 | GPIO1/TACH1 | BT_DET# | I |
| F8 | GPIO2/PIRQE# | PCI_INTE# | I |
| G11 | GPIO3/PIRQF# | PCI_INTF# | I |
| F12 | GPIO4/PIRQG# | PCI_INTG# | I |
| B3 | GPIO5/PIRQH# | PCI_INTH# | I |
| AJ9 | GPIO6/TACH2 | BIOS_REC | I/O |
| AH9 | GPIO7/TACH3 | WLAN_LED_EN | I |
| AE16 | GPIO8 | EXT_SMI# | I |
| AG19 | GPIO9/WOL_EN | GPIO9 | I |
| AJ24 | GPIO10/CLGPIO1 | / | |
| AG22 | GPIO11/SMBALERT# | SMB_ALERT# | I |
| AC19 | GPIO12 | KBC_SCI# | I |
| AH21 | GPIO13/GLAN_DOCK# | / | |
| AF22 | GPIO14/CLGPIO2 | / | |
| AE20 | GPIO15/STP_PCI# | STP_PCI# | I/O |
| AJ14 | GPIO16/DPRSLPVR | PM_DPRSLPVR | O |
| AG8 | GPIO17/TACH0 | WLAN_ON# | O |
| AH12 | GPIO18 | / | |
| AJ10 | GPIO19/SATA1GP | GPO19 | O |
| AE11 | GPIO20 | BTLED_ON | O |
| AJ12 | GPIO21/SATA0GP | CPU_Select | I |
| AG10 | GPIO22/SCLOCK | / | |
| E6 | GPIO23/LDRQ1# | LPC_DRQ#1 | I/O |
| AJ27 | GPIO24/CLGPIO0 | / | |
| AG18 | GPIO25/STP_CPU# | STP_CPU# | O |
| AH27 | GPIO26/S4_STATE# | PM_S4_STATE# | O |
| AH25 | GPIO27/QRT_STATE0 | BT_ON# | O |
| AD16 | GPIO28/QRT_STATE1 | CB_SD# | O |
| AG17 | GPIO29/OC#5 | USB_OC#5 | I |
| AD12 | GPIO30/OC#6 | NEWCARD_OC# | I |
| AJ18 | GPIO31/OC#7 | USB_OC#7 | I |
| AH11 | GPIO32/CLKRUN# | PM_CLKRUN# | O |
| AE10 | GPIO33/AZ_DOCK_EN# | | O |
| AG14 | GPIO34/AZ_DOCK_RST# | | |
| AG13 | GPIO35/SATACLKREQ# | GPO35 | O |
| AF11 | GPIO36/SATA2GP | GPO36 | O |
| AG11 | GPIO37/SATA3GP | PCB_ID0 | I |
| AF9 | GPIO38/SLOAD | PCB_ID1 | I |
| AJ11 | GPIO39/SDATAOUT0 | PCB_ID2 | I |
| AD10 | GPIO48/SDATAOUT1 | / | |
| AG29 | GPIO49/CPUPWRGD | H_PWRGD | O |

| Pin | Pin Name | Signal Name | Type |
|---|---|---|---|
| AG16 | GPIO40/OC#1 | USB_CON_OC01# | I |
| AG15 | GPIO41/OC#2 | USB_CON_OC2# | I |
| AE15 | GPIO42/OC#3 | USB_CON_OC3# | I |
| AF15 | GPIO43/OC#4 | USB_CON_OC4# | I |
| E18 | GPIO50/REQ1# | PCI_REQ#1 | |
| C18 | GPIO51/GNT1# | PCI_GNT#1 | |
| B19 | GPIO52/REQ2# | PCI_REQ#2 | |
| F18 | GPIO53/GNT2# | PCI_GNT#2 | |
| A11 | GPIO54/REQ3# | PCI_REQ#3 | |
| C10 | GPIO55/GNT3# | PCI_GNT#3 | |

## ICS9LPR363AGLF-T SETTING

| Pins | Pin Name | Device |
|---|---|---|
| 3 | PCICLK1 | TPMPCI |
| 4 | PCICLK2 | CardBus R5C833 |
| 5 | SELPCIEX0_LCD#PCICLK3 | EC IT8511E |
| 8 | ITP_EN/PCICLK_F0 | ICH8 |
| 15 | DOTC_96MHzL | MiniCard |
| 14 | DOTT_96MHzL | MiniCard |
| 12 | FSLA/USB_48MHz | ICH8 |
| 19 | PCIeT_L1 | MCH |
| 20 | PCIeC_L1 | MCH |
| 36 | PCIeT_L5 | NB8P |
| 35 | PCIeC_L5 | NB8P |
| 39 | PCIeT_L6 | MiniCard(Rob) |
| 38 | PCIeC_L6 | MiniCard(Rob) |
| 22 | PCIeT_L2 | ICH8 |
| 23 | PCIeC_L2 | ICH8 |
| 24 | PCIeT_L3 | MiniCard |
| 25 | PCIeC_L3 | MiniCard |
| 26 | SATACLKT_L | ICH8 |
| 27 | SATACLKC_L | ICH8 |
| 44 | CPUITPT_L2 / PCIeT_L8 | LAN |
| 43 | CPUITPC_L2 / PCIeC_L8 | LAN |
| 14 | 27FIX/LCD_SSCGT/PCIeT_L0 | M66M |
| 15 | DOTC_96MHzL | M66M |
| 41 | PEREQ1# / PCIeT_L7 | ESATA |
| 40 | PEREQ2# / PCIeC_L7 | ESATA |
| 32 | PEREQ3# | NewCard |
| 33 | PEREQ4# | MiniCard |
| 30 | PCIeT_L4 | NewCard |
| 31 | PCIeC_L4 | NewCard |
| 49 | CPUT_L1F | MCH |
| 48 | CPUC_L1F | MCH |
| 52 | CPUT_L0 | CPU |
| 51 | CPUC_L0 | CPU |
| 57 | X2 | 14.318MHz |
| 58 | X1 | 14.318MHz |
| 60 | REF0 | ICH8 |
| 61 | REF1/PSLCTEST_SEL | X |

| | | |
|---|---|---|
| ASUSTek Computer INC. NB1 | Title : System Setting | |
| | Engineer: Gajun_Ho | |
| Size: Custom | Project Name: F3Sc | Rev: 2.0 |
| Date: 星期三, 三月 21, 2007 | Sheet 2 of 95 | |

<< Kennedy_Zhang >>

<Variant Name>

| | | |
|---|---|---|
| ASUSTeK COMPUTER INC | Title : Schematic page name | |
| | Engineer: Gajun_Ho | |
| Size: Custom | Project Name: F3Sc | Rev: 2.0 |
| Date: 星期三, 十月 21, 2007 | Sheet 3 of 95 | |

<< Kennedy_Zhang >>

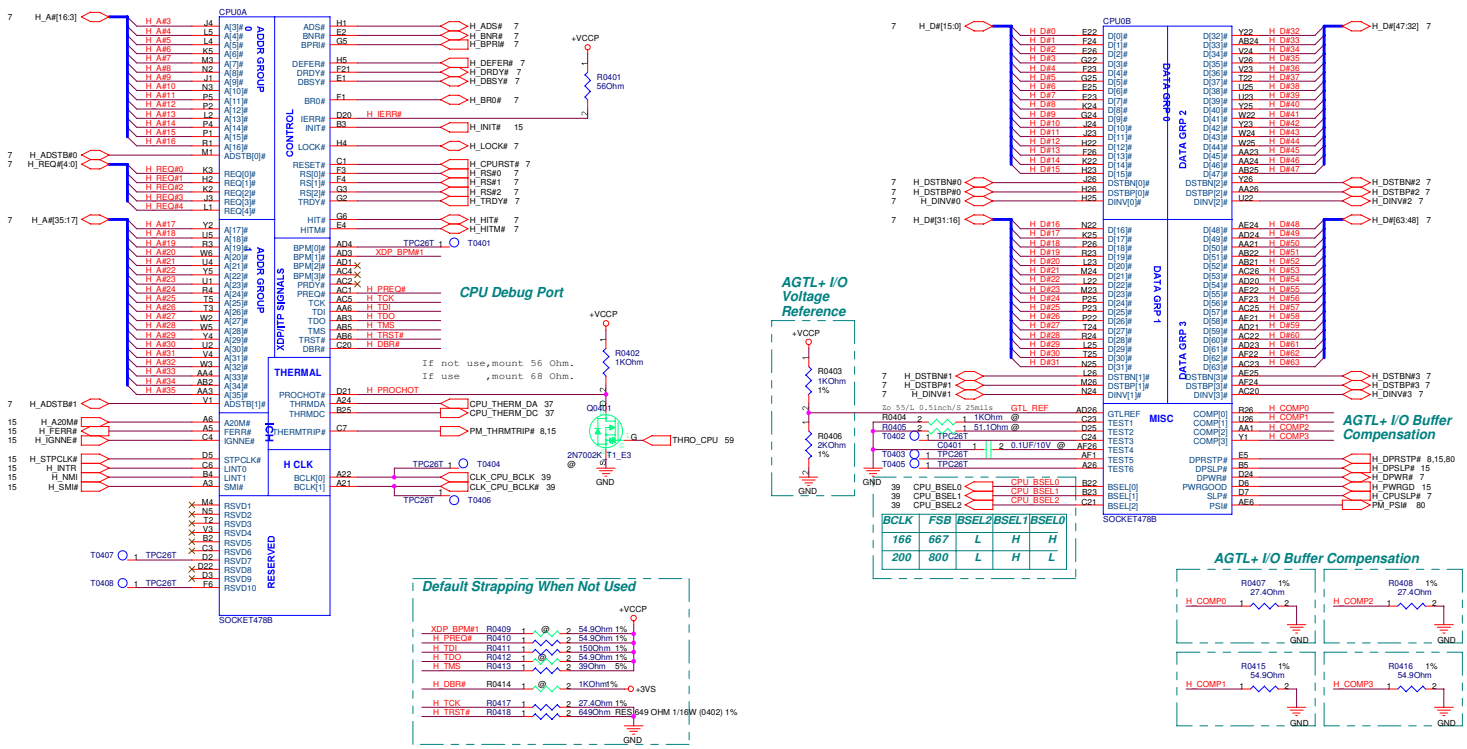


<Variant Name>

| | | |
|---|---|---|
| ASUSTeK COMPUTER INC. NB1 | Title : CPU-Merom(HOST) | |
| | Engineer: Gajun_Ho | |
| Size: Custom | Project Name: F3Sc | Rev: 2.0 |
| Date: 月日, 年 21, 2007 | Sheet 4 of 95 | |

<< Kennedy_Zhang >>

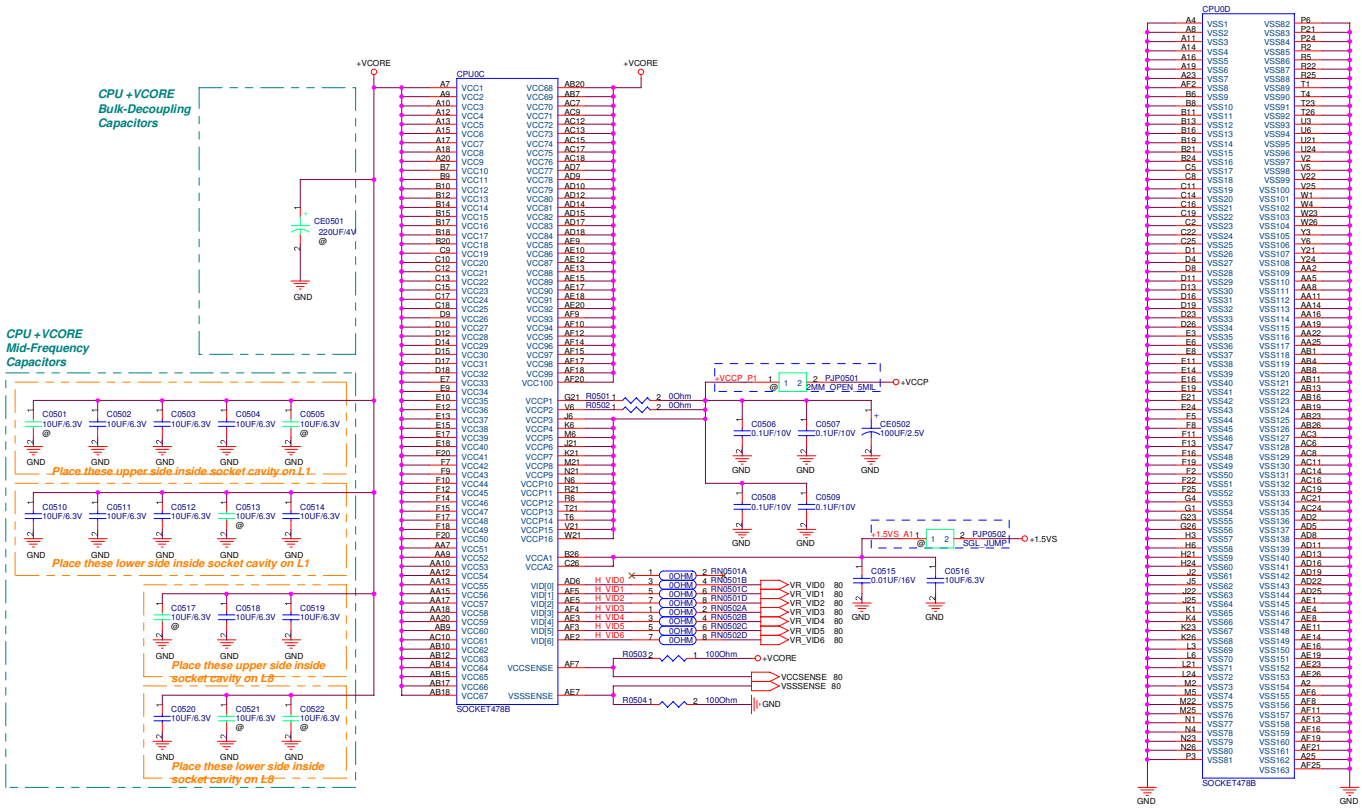


*+VCORE Mid-Frequency Capacitor*
*Intel: 22UF *32*
*F3S: 10UF *16*
*+VCCP Decoupling Capacitor*
*Intel: 270UF *1, 0.1UF *6*
*F3S: 100UF *1, 0.1UF *4*

<Variant Name>

| | | | |
|---|---|---|---|
| ASUSTeK COMPUTER INC. NB1 | Title : CPU-Merom(PWR) | | |
| | Engineer: Gajun_Ho | | |
| Size: Custom | Project Name: F3Sc | | Rev: 2.0 |
| Date: 月日, 年月 21, 2007 | Sheet 5 of 95 | | |

<< Kennedy_Zhang >>

<Variant Name>

| | | |
|---|---|---|
| ASUSTeK COMPUTER INC | Title : Schematic page name | |
| | Engineer: Gajun_Ho | |
| Size: Custom | Project Name: F3Sc | Rev: 2.0 |
| Date: 星期三, 十月 21, 2007 | Sheet 6 of 95 | |

<< Kennedy_Zhang >>

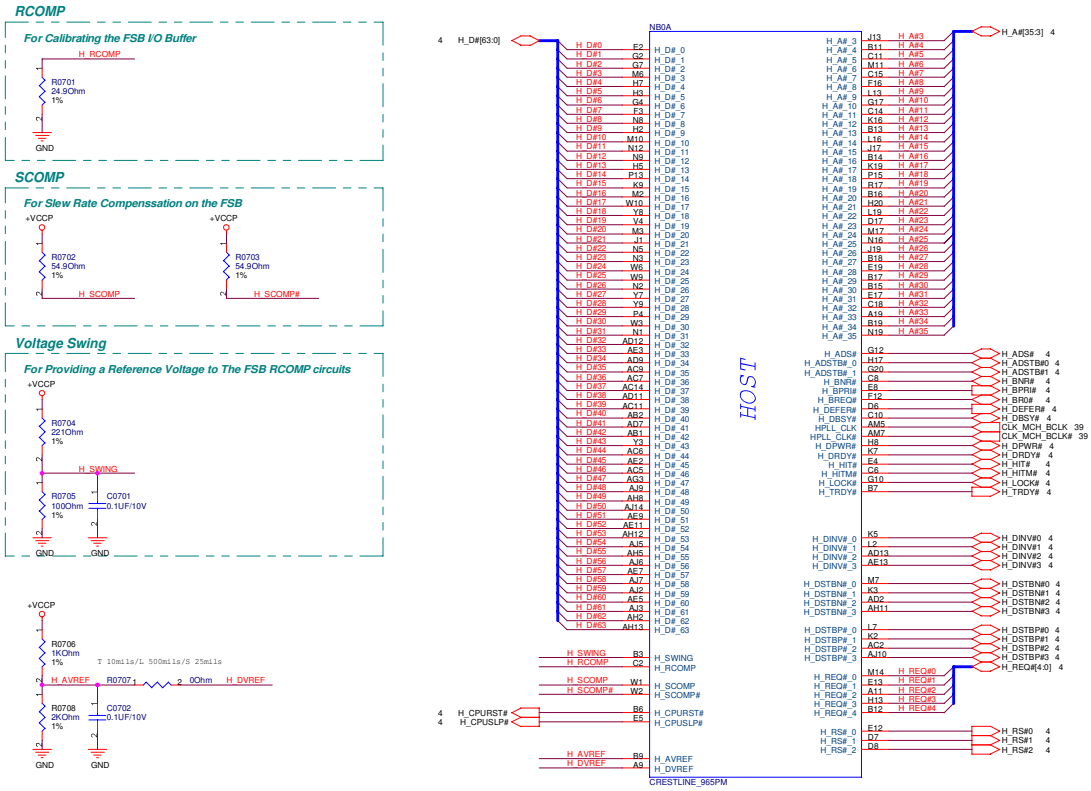


<Variant Name>

| | | |
|---|---|---|
| ASUSTeK COMPUTER INC. NB1 | Title : NB-965PM(HOST) | |
| | Engineer: Gajun_Ho | |
| Size: Custom | Project Name: F3Sc | Rev: 2.0 |
| Date: 星期三, 二月 21, 2007 | Sheet 7 of 95 | |

<< Kennedy_Zhang >>

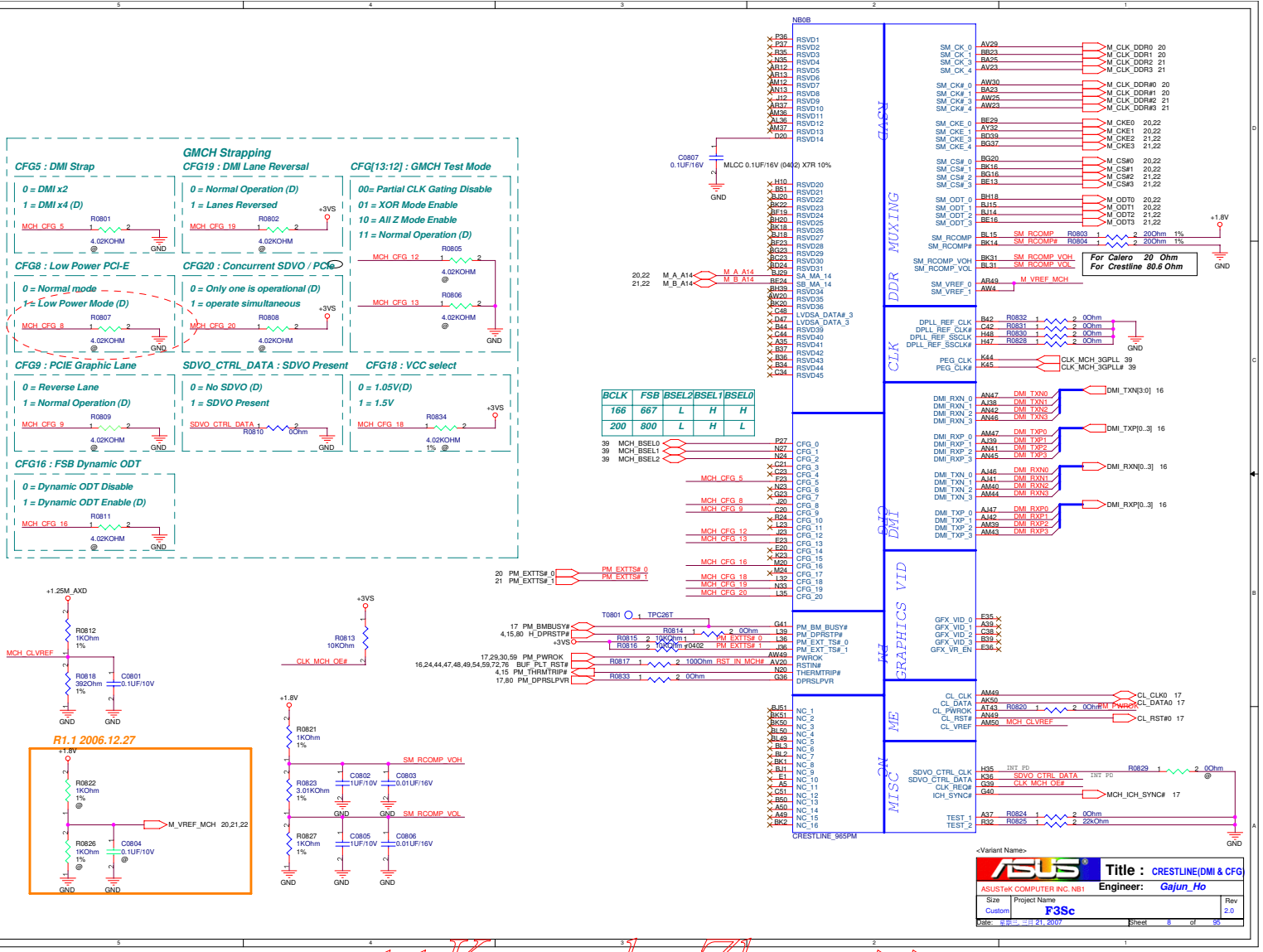


<< Kennedy_Zhang >>

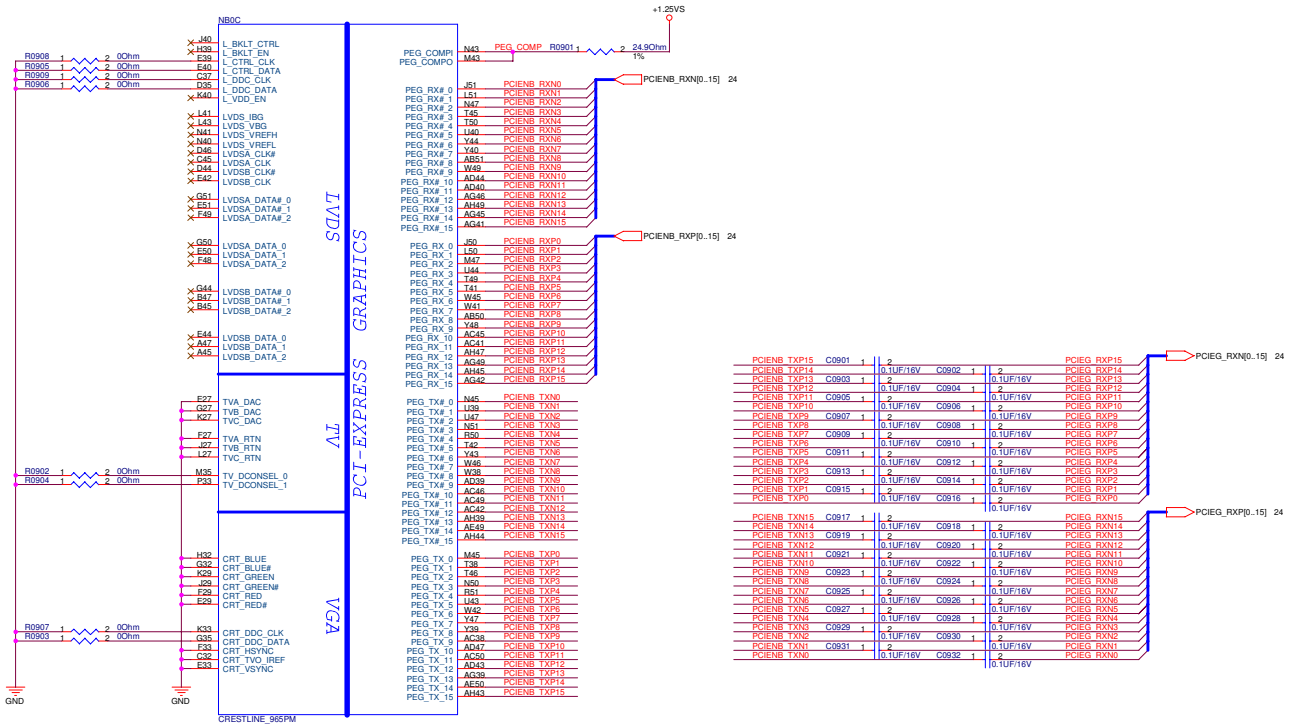


<Variant Name>

| | | |
|---|---|---|
| ASUSTeK COMPUTER INC. NB1 | Title : NB_965PM(GRAPHIC) | |
| | Engineer: Gajun_Ho | |
| Size: Custom | Project Name: F3Sc | Rev: 2.0 |
| Date: 月曜三, 二月 21, 2007 | Sheet 9 of 95 | |

<< Kennedy_Zhang >>

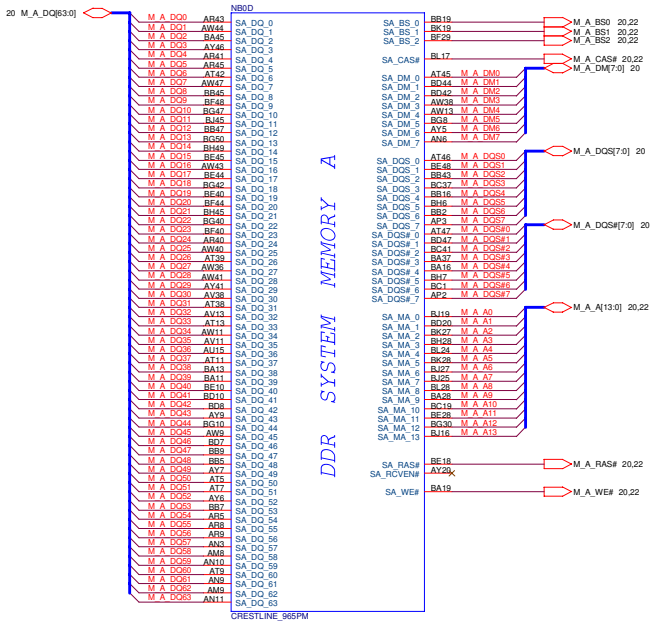


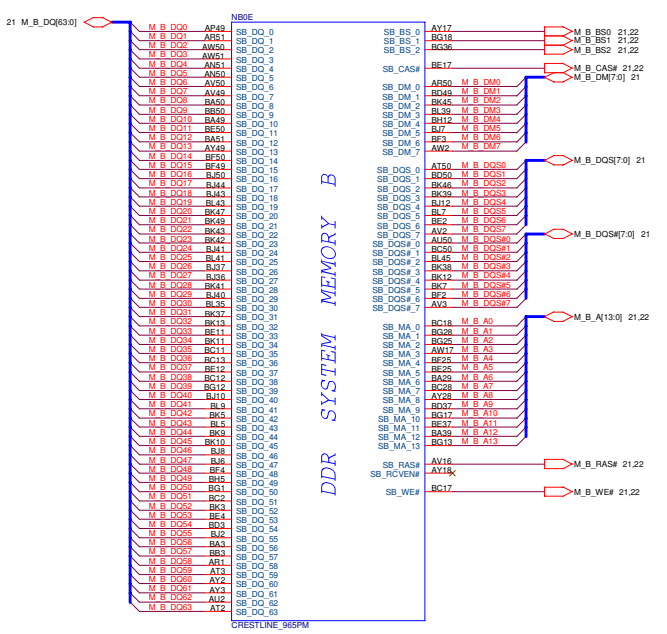


<Variant Name>

| | | |
|---|---|---|
| ASUS | Title : NB-965PM(DDR2) | |
| ASUSTeK COMPUTER INC. NB1 | Engineer: Gajun_Ho | |
| Size: Custom | Project Name: F3Sc | Rev: 2.0 |
| Date: 星期三, 三月 21, 2007 | Sheet 10 of 95 | |

<< Kennedy_Zhang >>

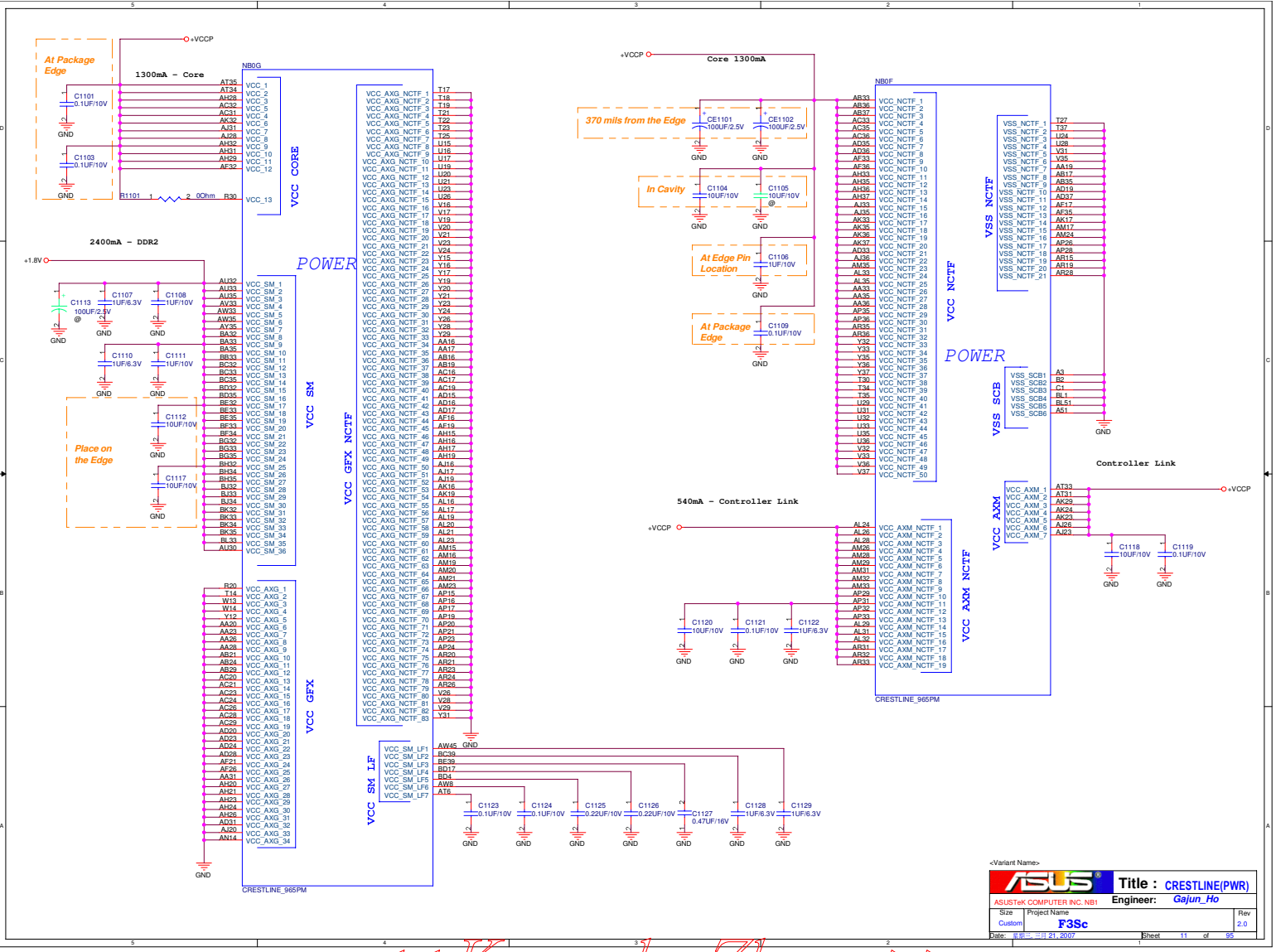


<< Kennedy_Zhang >>

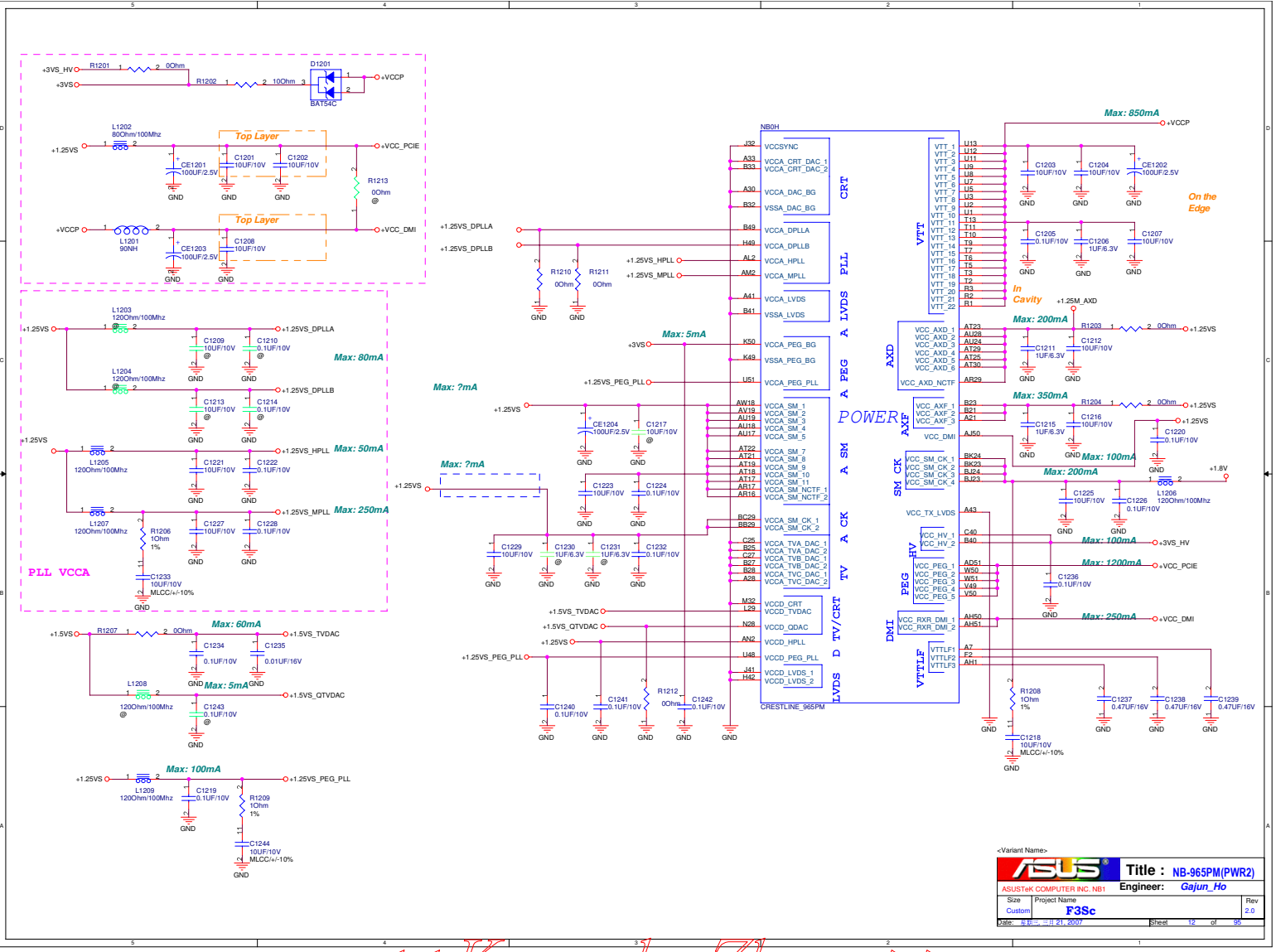


<Variant Name>

| | | | |
|---|---|---|---|
| ASUS | Title : NB-965PM(PWR2) | | |
| ASUSTeK COMPUTER INC. NB1 | Engineer: Gajun_Ho | | |
| Size: Custom | Project Name: F3Sc | | Rev: 2.0 |
| Date: 月日, 年 21, 2007 | Sheet 12 of 95 | | |

<< Kennedy_Zhang >>

<Variant Name>

| | | |
|---|---|---|
| ASUSTeK COMPUTER INC. NB1 | Title : CRESTLINE(GND) | |
| | Engineer: Gajun_Ho | |
| Size: Custom | Project Name: F3Sc | Rev: 2.0 |
| Date: 五四三, 三月 21, 2007 | Sheet 13 of 95 | |

<< Kennedy_Zhang >>

<Variant Name>

| | | |
|---|---|---|
| ASUSTeK COMPUTER INC | Title : Schematic page name | |
| | Engineer: Gajun_Ho | |
| Size: C | Project Name: F3Sc | Rev: 2.0 |
| Date: 星期一, 十月 21, 2007 | Sheet 14 of 55 | |

<< Kennedy_Zhang >>

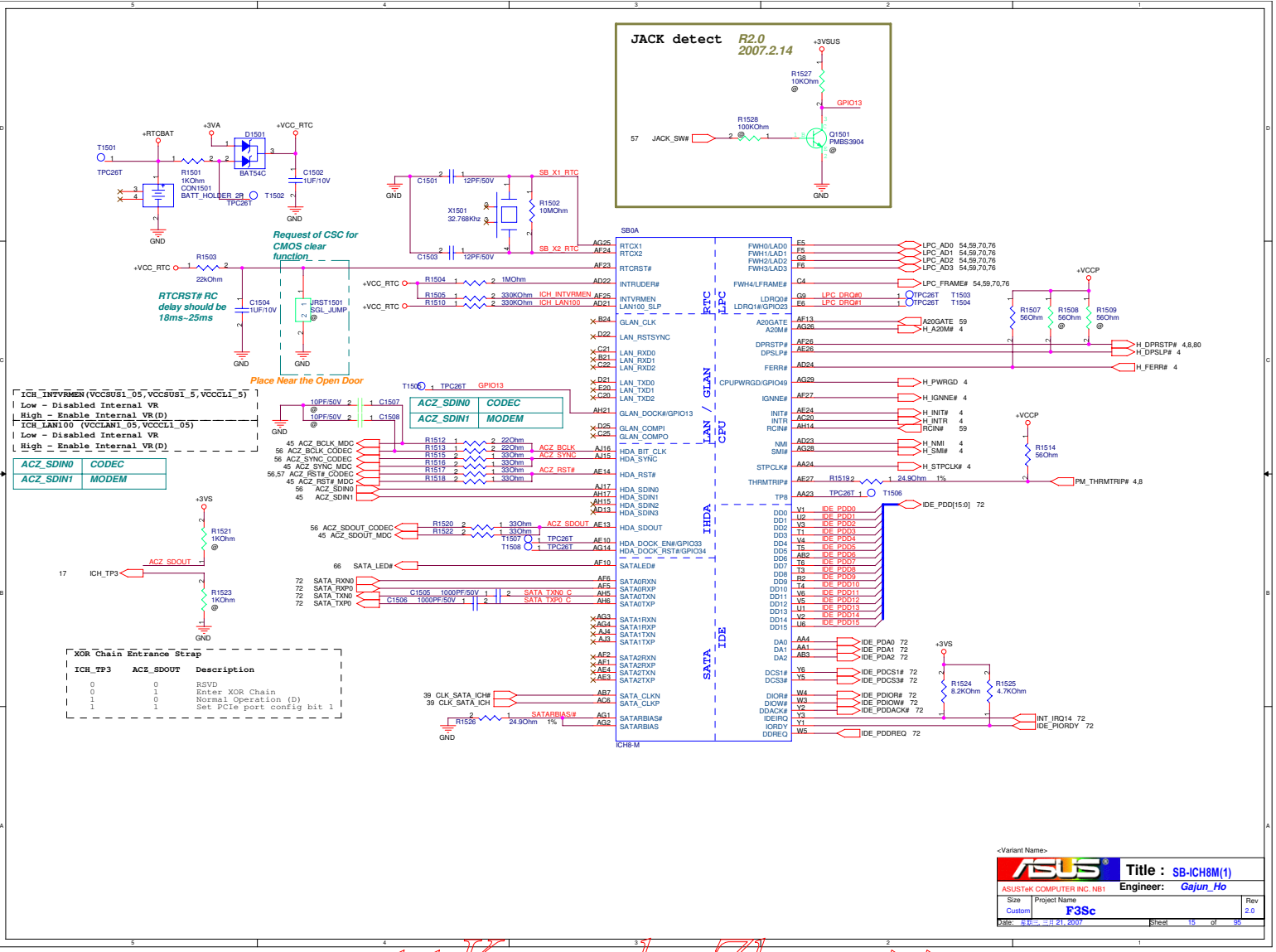


<< Kennedy_Zhang >>

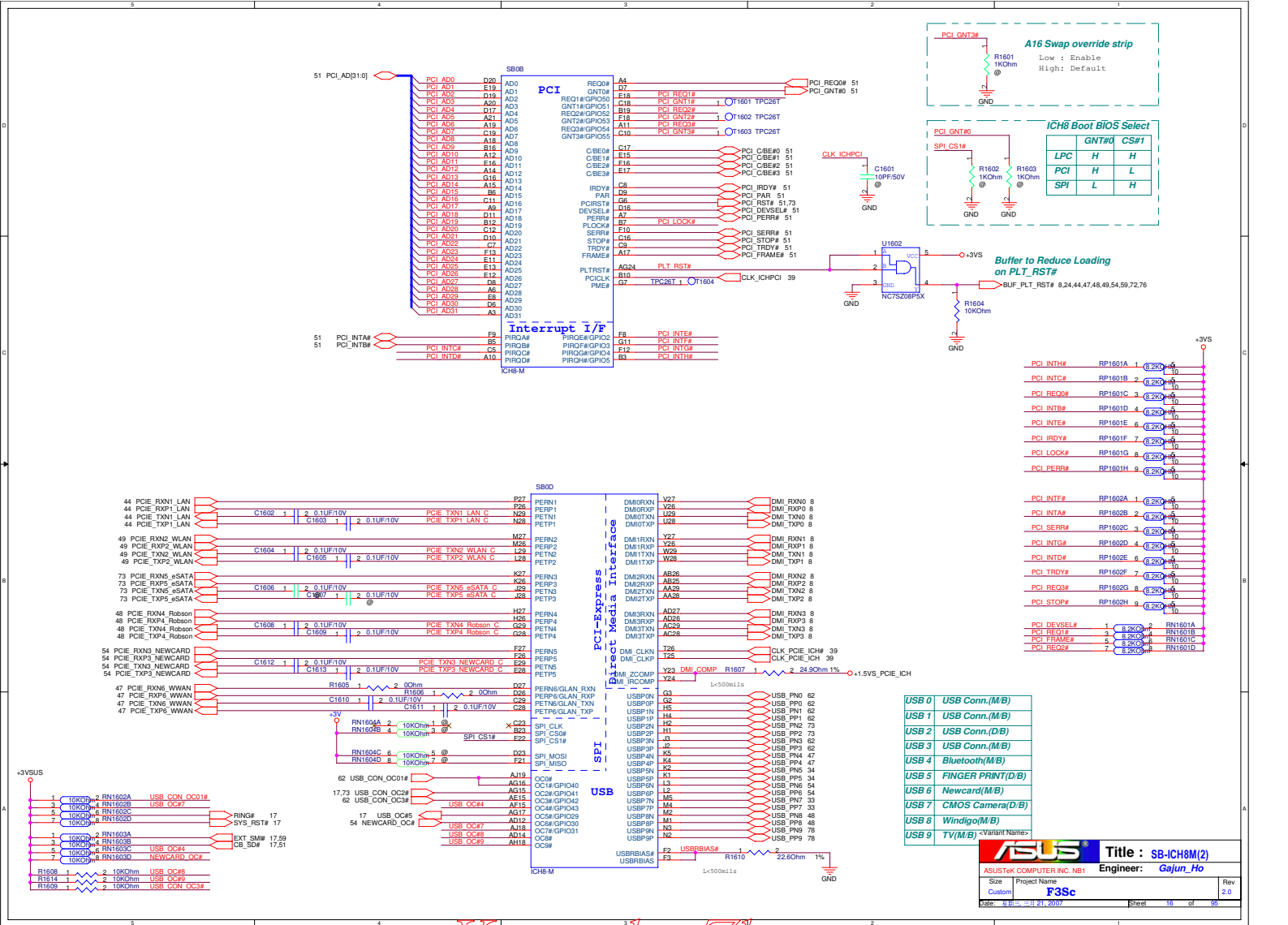


<< Kennedy_Zhang >>

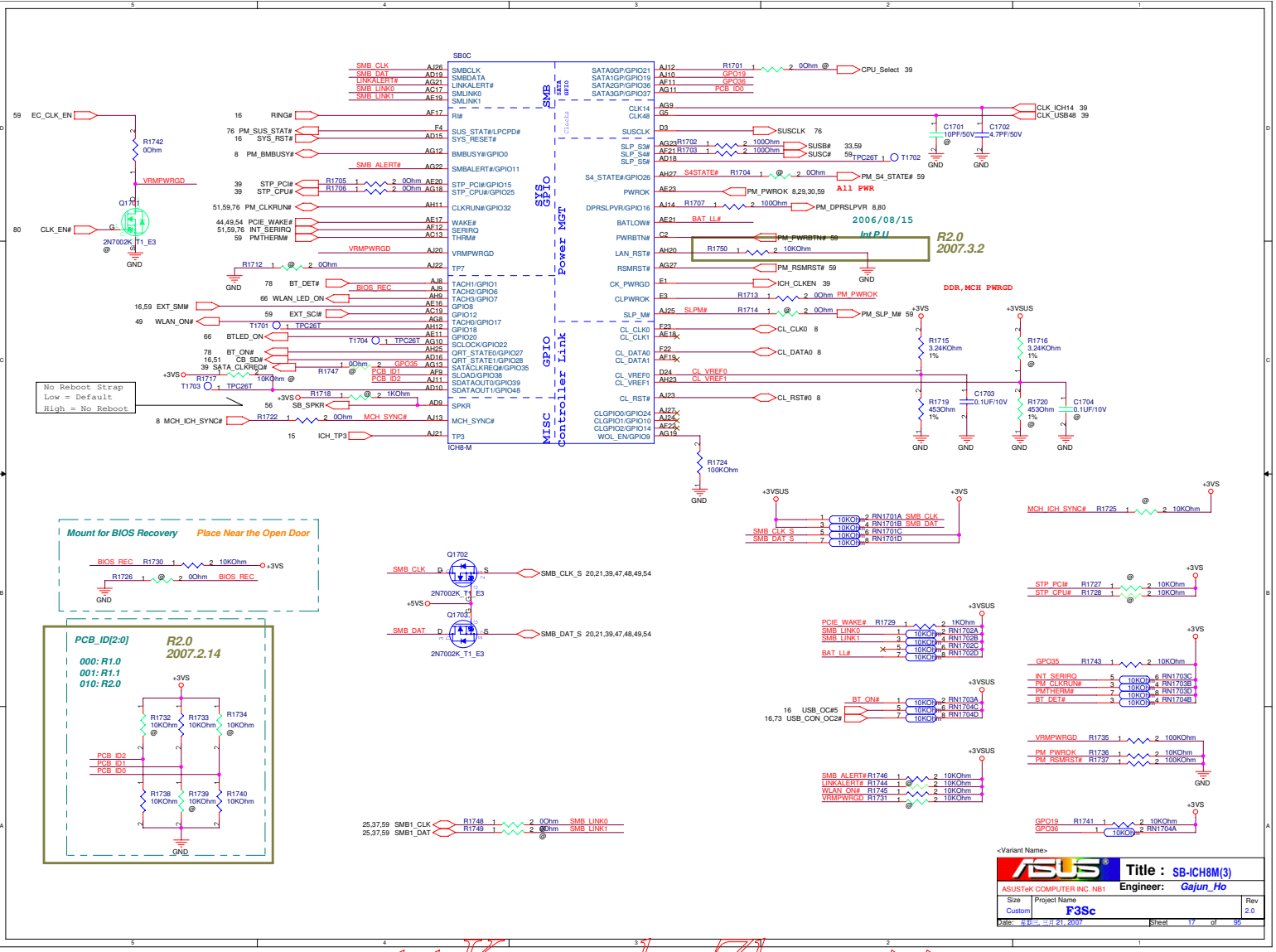


<< Kennedy_Zhang >>

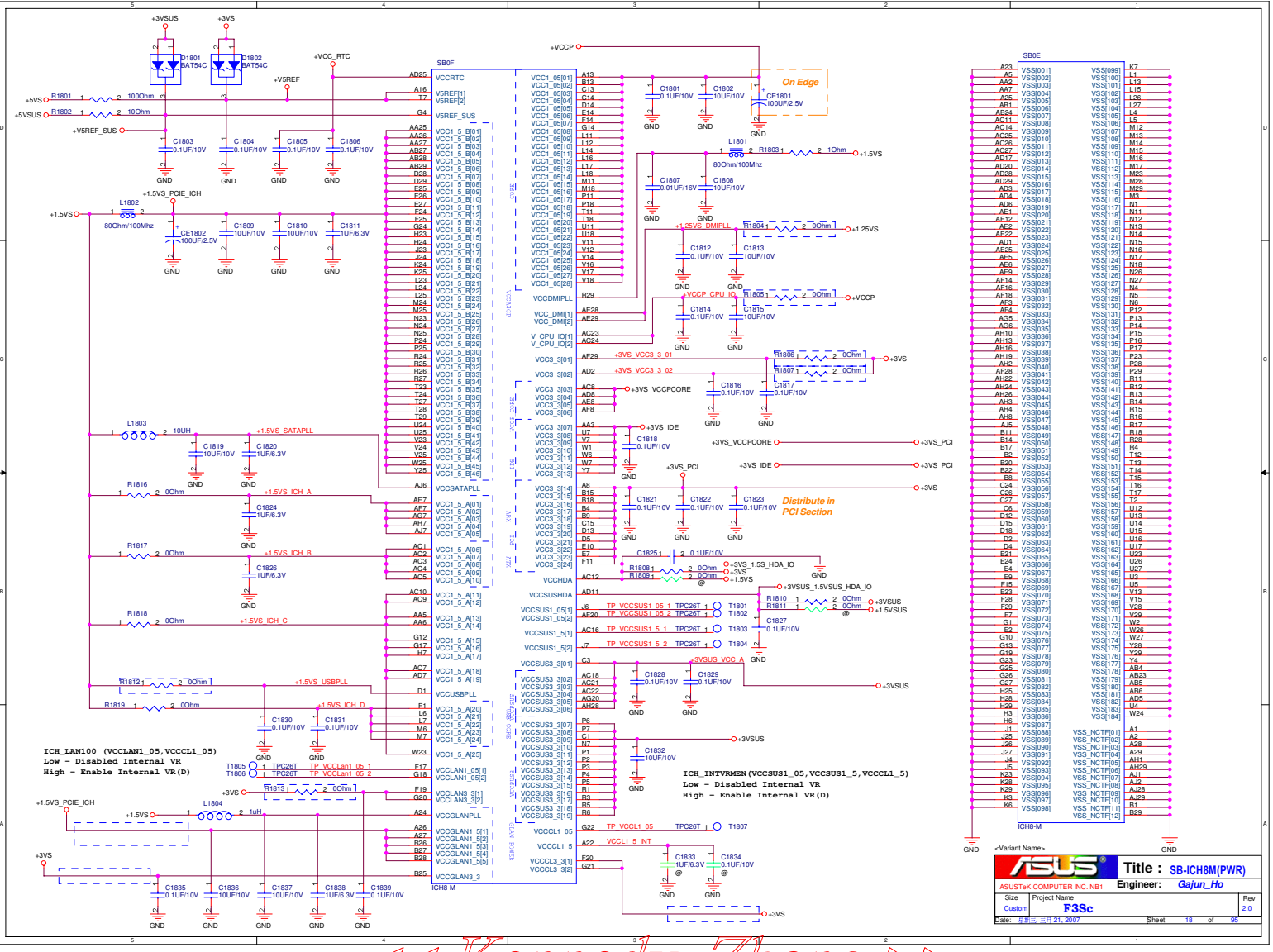


<< Kennedy_Zhang >>

<Variant Name>

| | | |
|---|---|---|
| ASUSTeK COMPUTER INC | Title : Schematic page name | |
| | Engineer: Gajun_Ho | |
| Size: Custom | Project Name: F3Sc | Rev: 2.0 |
| Date: 星期三, 十月 21, 2007 | Sheet 19 of 95 | |

<< Kennedy_Zhang >>

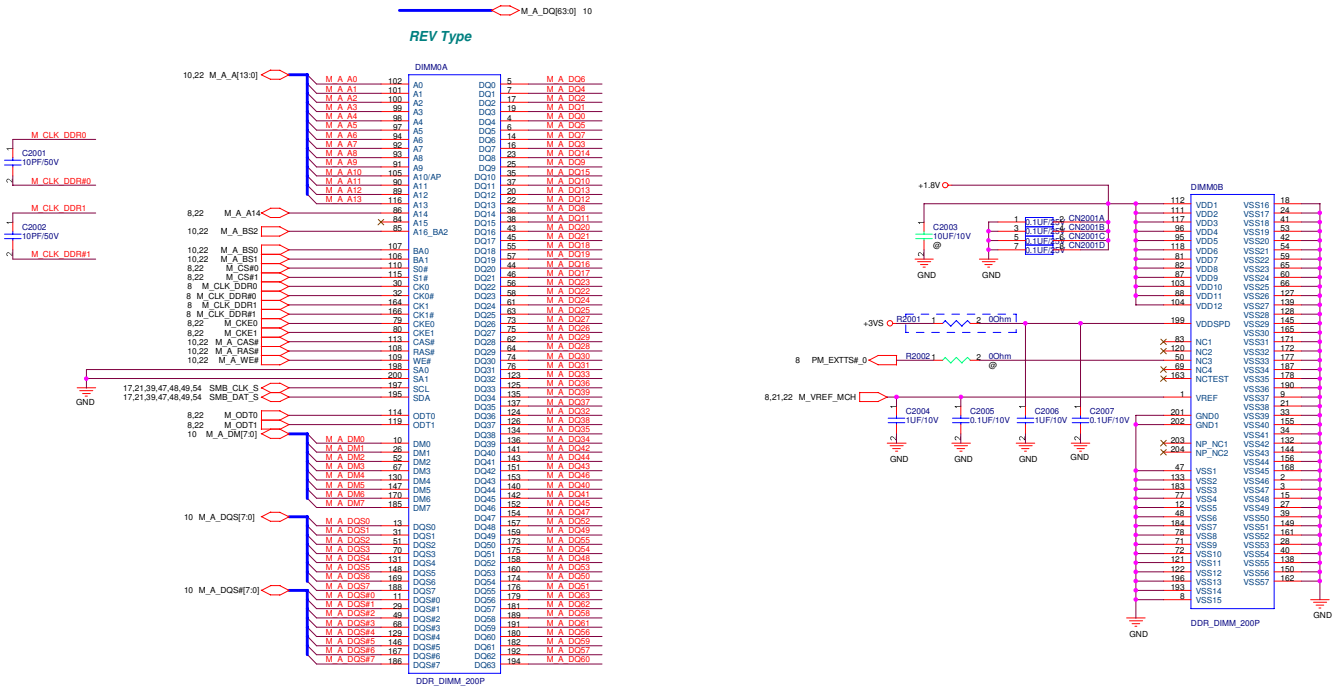


<Variant Name>

| | | |
|---|---|---|
| ASUSTeK COMPUTER INC. NB1 | Title : DDR2 SO-DIMM0 | |
| | Engineer: Gajun_Ho | |
| Size: Custom | Project Name: F3Sc | Rev: 2.0 |
| Date: 月日, 年 21, 2007 | Sheet 20 of 95 | |

<< Kennedy_Zhang >>

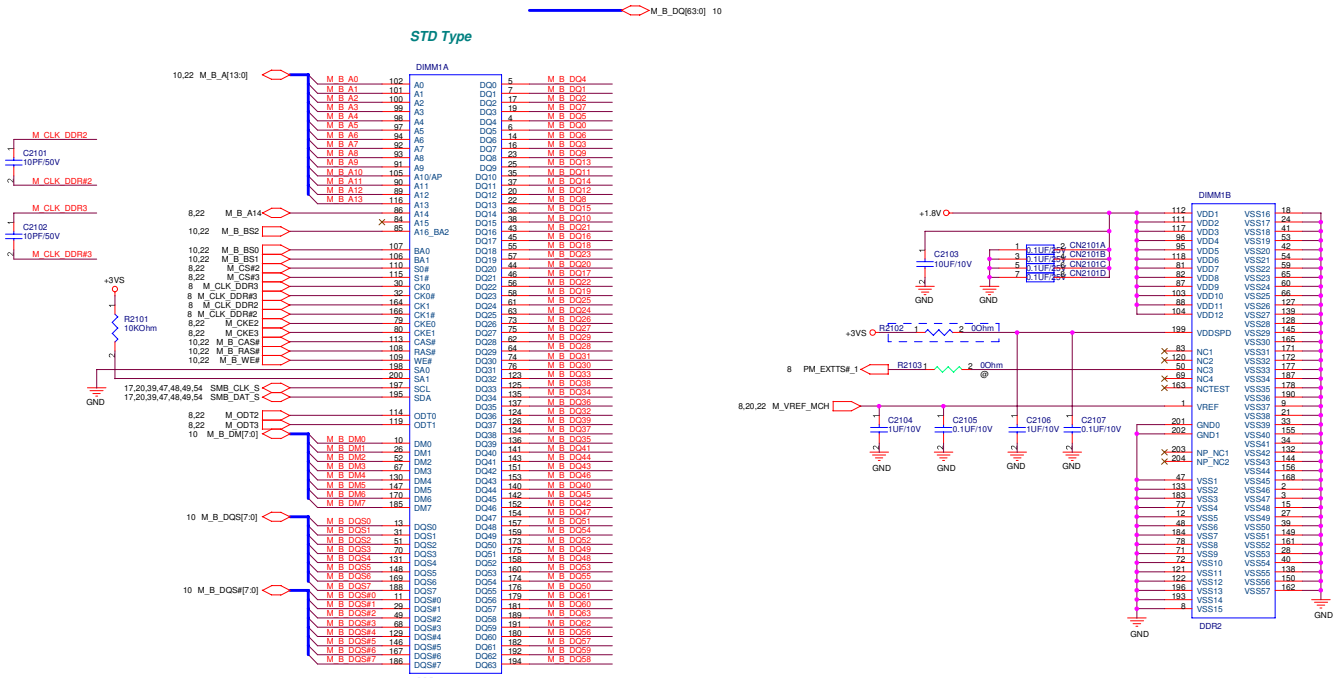


<Variant Name>

| | | |
|---|---|---|
| ASUSTeK COMPUTER INC. NB1 | Title : DDR2 SO-DIMM1 | |
| | Engineer: Gajun_Ho | |
| Size: Custom | Project Name: F3Sc | Rev: 2.0 |
| Date: 星期三, 三月 21, 2007 | Sheet 21 of 95 | |

<< Kennedy_Zhang >>

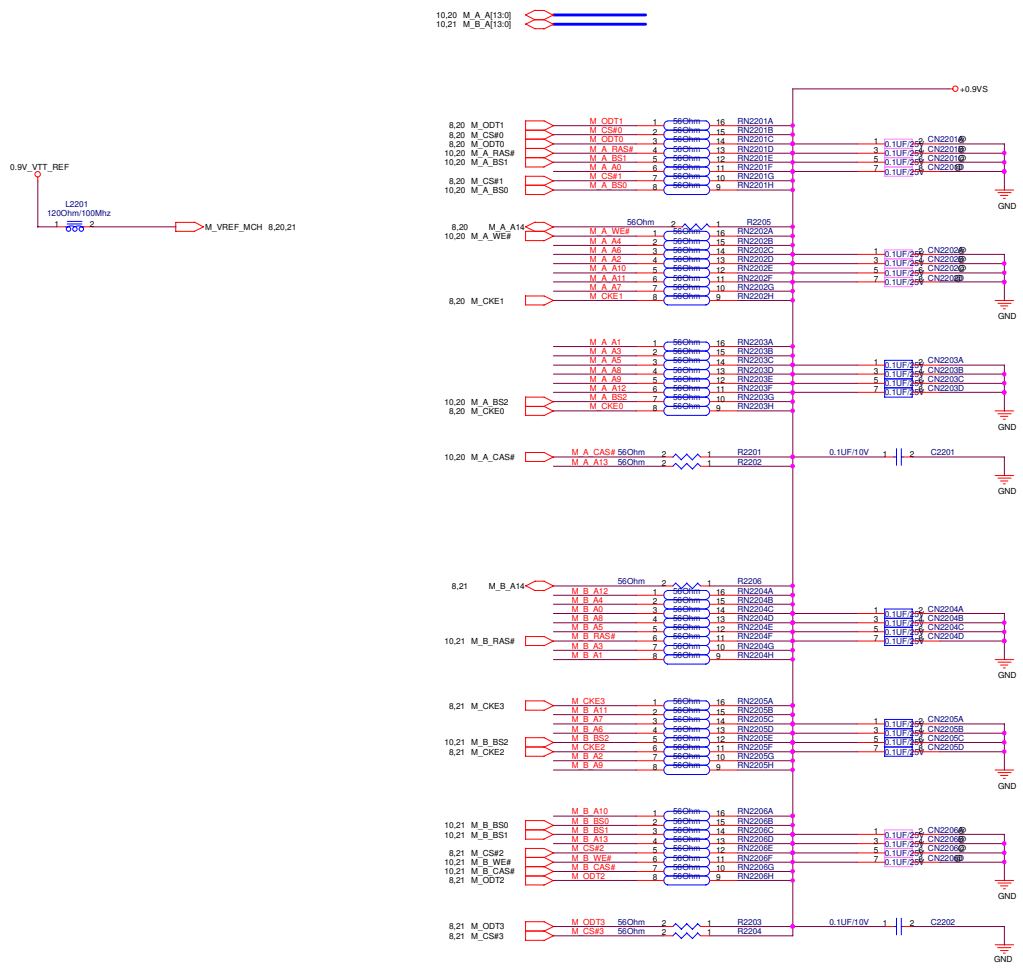


<Variant Name>

| | | |
|---|---|---|
| ASUSTeK COMPUTER INC. NB1 | Title : DDR2 TERMINATION | |
| | Engineer: Gajun_Ho | |
| Size: Custom | Project Name: F3Sc | Rev: 2.0 |
| Date: 星期三, 二月 21, 2007 | Sheet 22 of 95 | |

<< Kennedy_Zhang >>

<Variant Name>

| | | |
|---|---|---|
| ASUSTeK COMPUTER INC | Title : Schematic page name | |
| | Engineer: Gajun_Ho | |
| Size: Custom | Project Name: F3Sc | Rev: 2.0 |
| Date: 星期三, 三月 21, 2007 | Sheet 23 of 95 | |

<< Kennedy_Zhang >>

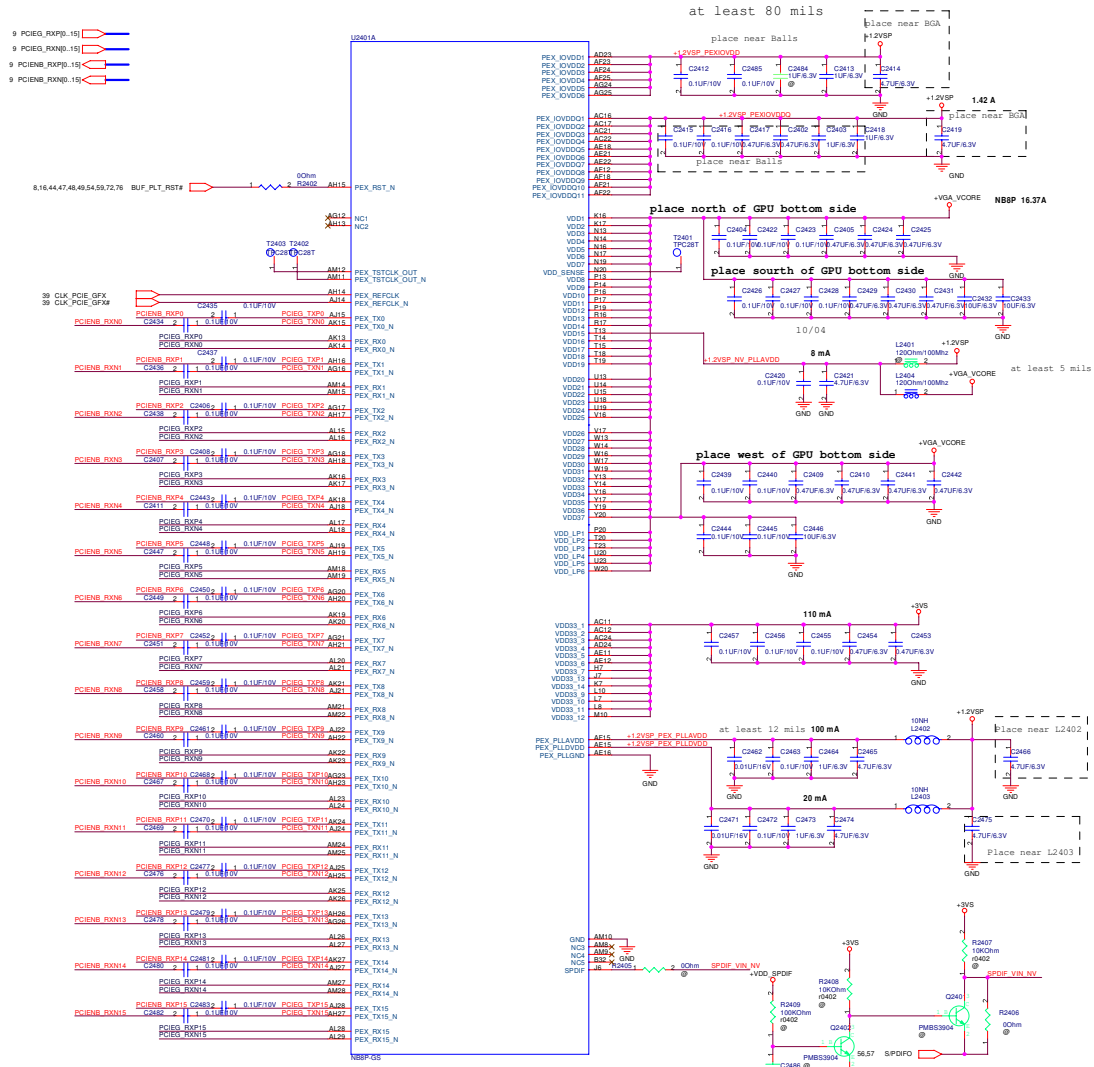


ASUSTeK COMPUTER INC

Title : G86M(1)_PCI-E

Engineer: Gajun_Ho

| Size | Project Name | Rev |
|---|---|---|
| C | F3Sc | 2.0 |

Date: 星期二, 十月 21, 2007 Sheet 24 of 95

<< Kennedy_Zhang >>

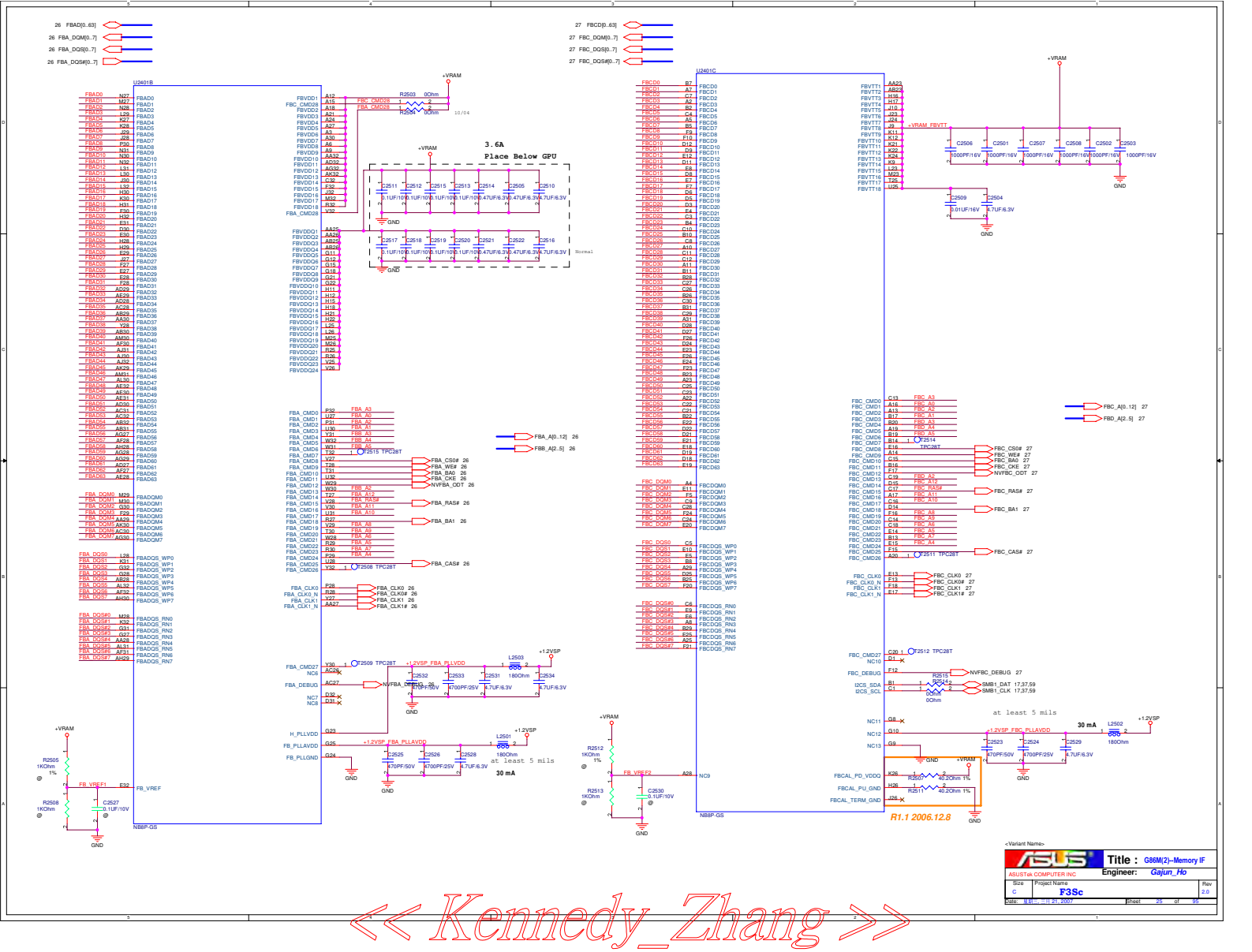


<< Kennedy_Zhang >>

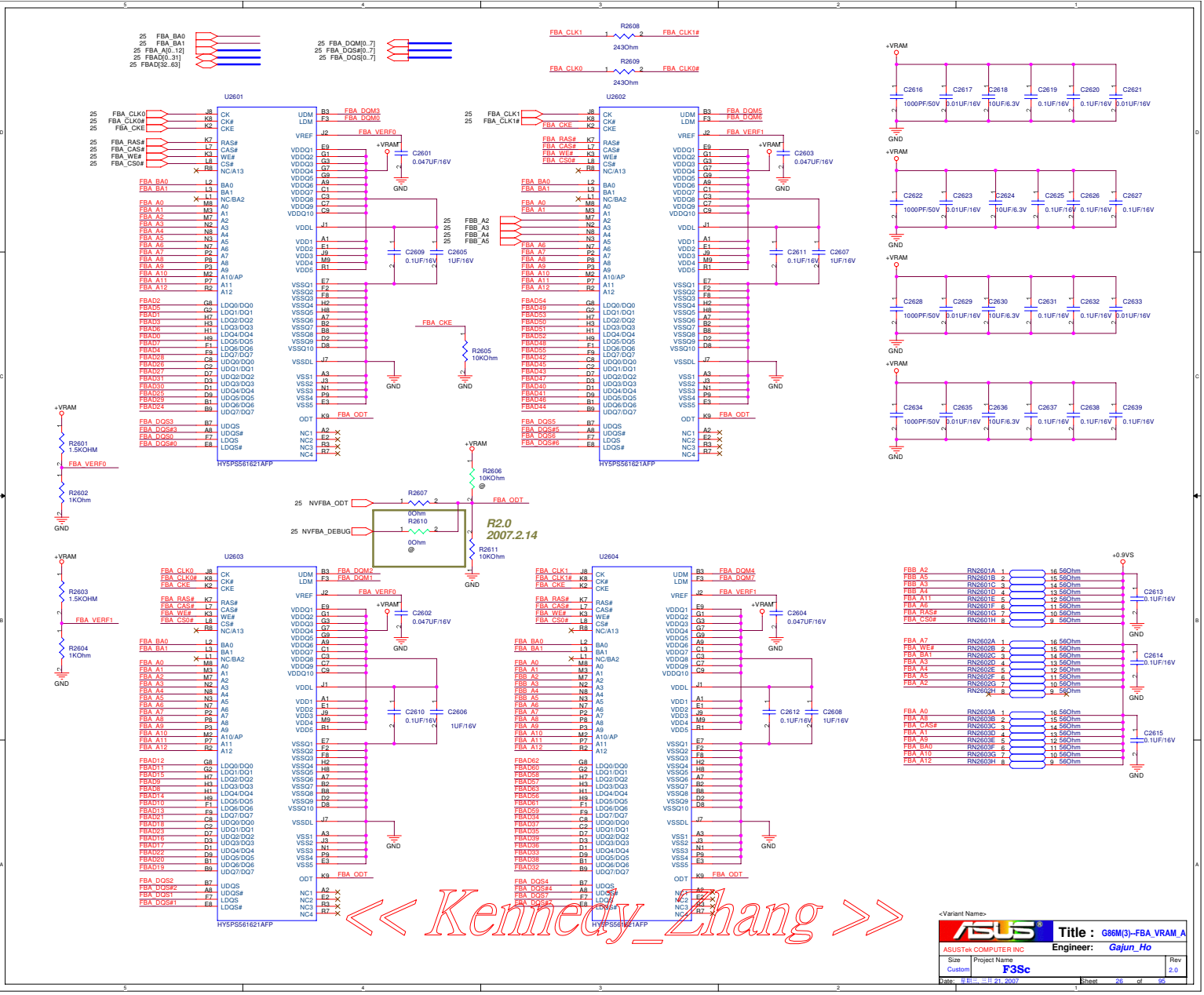


<Variant Name>

ASUS

ASUSTek COMPUTER INC

Title : G86M(3)--FBA_VRAM_A

Engineer: Gajun_Ho

| Size | Project Name | Rev |
|---|---|---|
| Custom | F3Sc | 2.0 |

Date: 星期三, 三月 21, 2007 Sheet 26 of 95

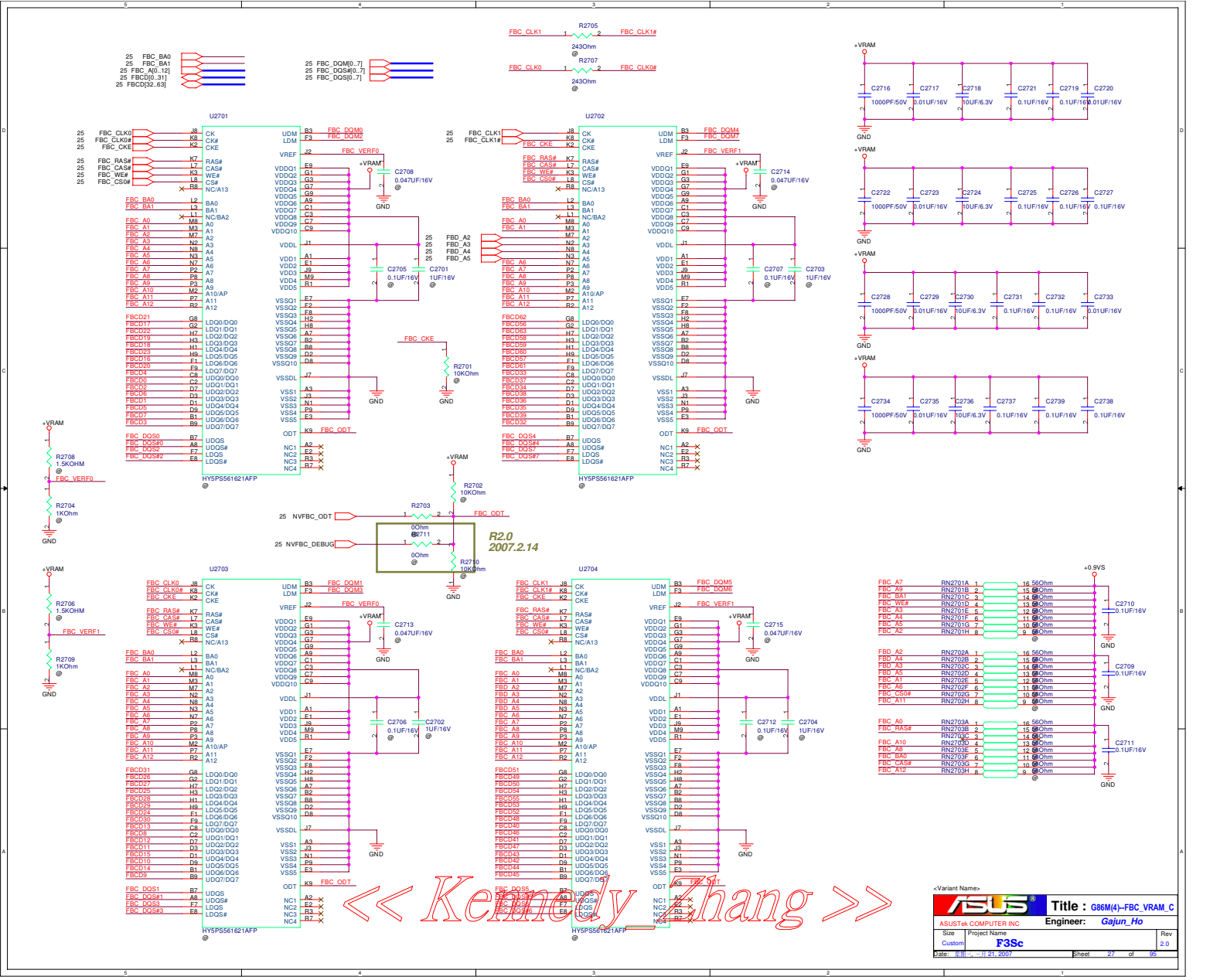
U2701
U2702
U2703
U2704
HY5PS561621AFP
R2.0
2007.2.14
<< Kenny Zhang >>

10/04

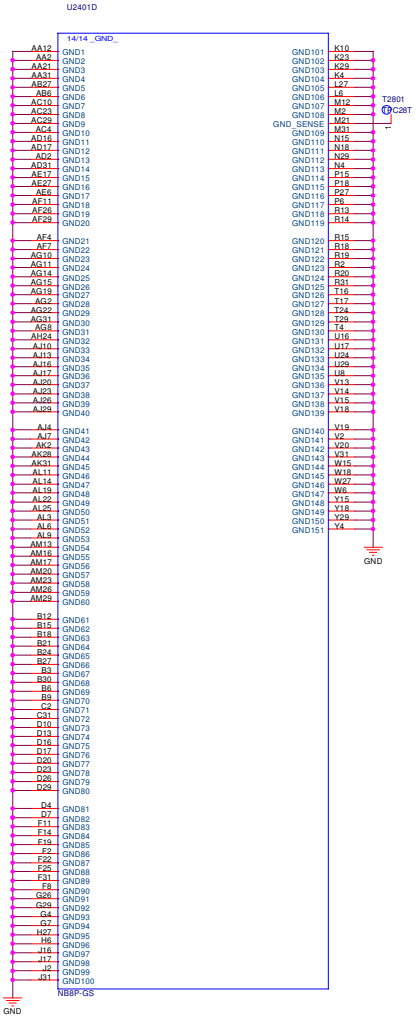


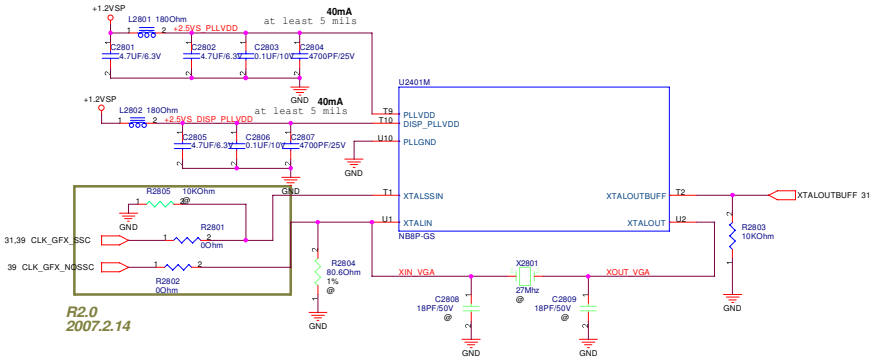


| TYPE | R2801 | R2802 | X2801, C2873, C2874 |
|---|---|---|---|
| CLK_GFX_NOSSC | | mount | |
| CLK_GFX_SSC | mount | | |
| Crystal | | | mount |

<< Kennedy_Zhang >>

| | | |
|---|---|---|
| ASUSTek COMPUTER INC | Title : G86M(5)-GND&Decoupling | Engineer: Gajun_Ho |
| Size: Custom | Project Name: F3Sc | Rev: 2.0 |
| Date: 星期二, 二月 21, 2007 | Sheet 28 of 95 | |

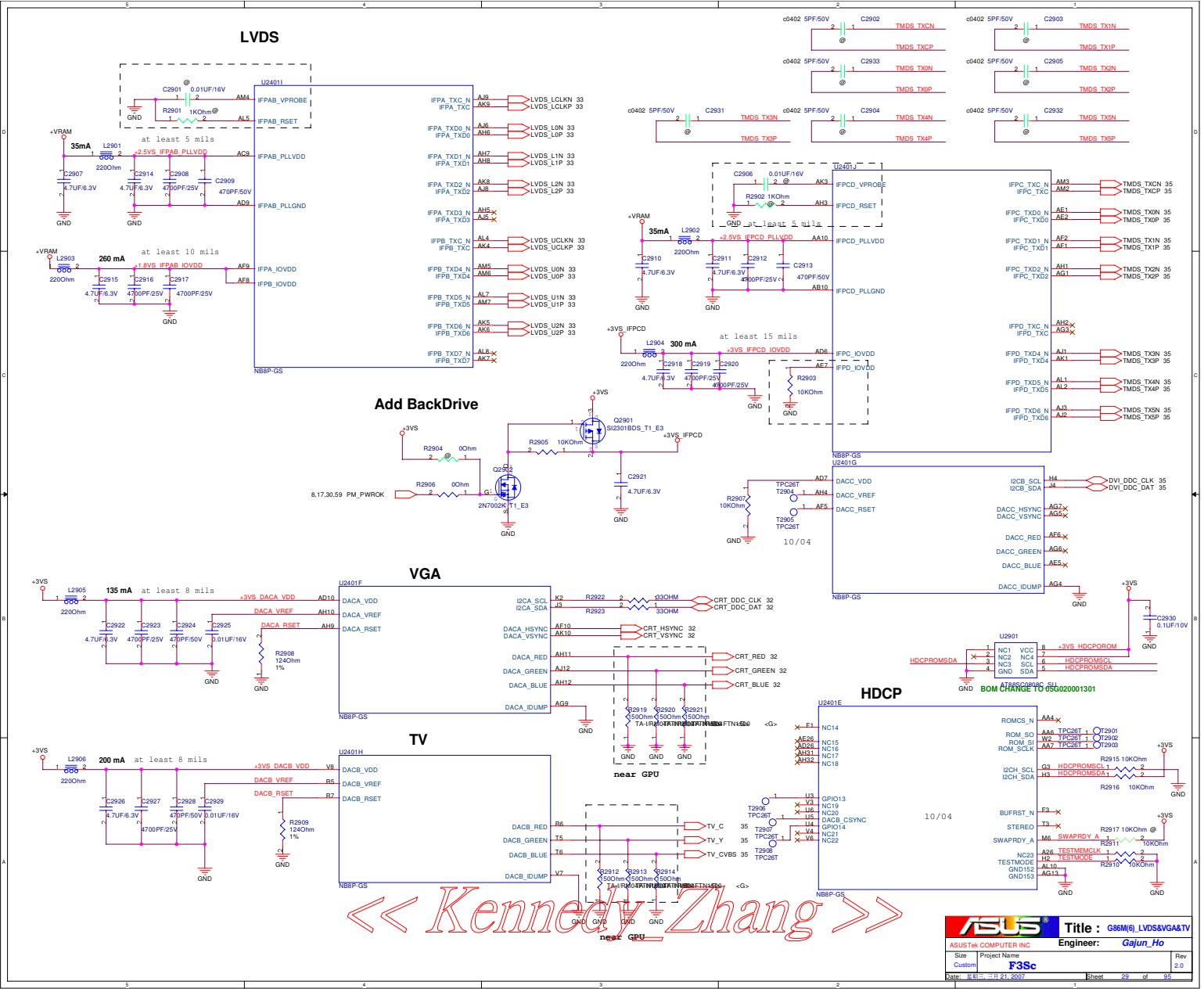
LVDS
U2401I
NB8P-GS
IFPAB_VPROBE
IFPAB_RSET
IFPAB_PLLVDD
IFPAB_PLLGND
IFPA_IOVDD
IFPB_IOVDD
IFPA_TXC_N
IFPA_TXC
IFPA_TXD0_N
IFPA_TXD0
IFPA_TXD1_N
IFPA_TXD1
IFPA_TXD2_N
IFPA_TXD2
IFPA_TXD3_N
IFPA_TXD3
IFPB_TXC_N
IFPB_TXC
IFPB_TXD4_N
IFPB_TXD4
IFPB_TXD5_N
IFPB_TXD5
IFPB_TXD6_N
IFPB_TXD6
IFPB_TXD7_N
IFPB_TXD7
LVDS_LCLKN 33
LVDS_LCLKP 33
LVDS_L0N 33
LVDS_L0P 33
LVDS_L1N 33
LVDS_L1P 33
LVDS_L2N 33
LVDS_L2P 33
LVDS_UCLKN 33
LVDS_UCLKP 33
LVDS_U0N 33
LVDS_U0P 33
LVDS_U1N 33
LVDS_U1P 33
LVDS_U2N 33
LVDS_U2P 33
C2901 0.01UF/16V
R2901 1KOhm
at least 5 mils
+VRAM
35mA
L2901 220Ohm
+2.5VS_IFPAB_PLLVDD
C2907 4.7UF/6.3V
C2914 4.7UF/6.3V
C2908 4700PF/25V
C2909 470PF/50V
GND
+VRAM
L2903 220Ohm
260 mA
at least 10 mils
+1.8VS_IFPAB_IOVDD
C2915 4.7UF/6.3V
C2916 4700PF/25V
C2917 4700PF/25V
c0402 5PF/50V C2902 TMDS_TXCN TMDS_TXCP
c0402 5PF/50V C2903 TMDS_TX1N TMDS_TX1P
c0402 5PF/50V C2933 TMDS_TX0N TMDS_TX0P
c0402 5PF/50V C2905 TMDS_TX2N TMDS_TX2P
c0402 5PF/50V C2931 TMDS_TX3N TMDS_TX3P
c0402 5PF/50V C2904 TMDS_TX4N TMDS_TX4P
c0402 5PF/50V C2932 TMDS_TX5N TMDS_TX5P
U2401J
IFPCD_VPROBE
IFPCD_RSET
IFPCD_PLLVDD
IFPCD_PLLGND
IFPC_IOVDD
IFPD_IOVDD
IFPC_TXC_N
IFPC_TXC
IFPC_TXD0_N
IFPC_TXD0
IFPC_TXD1_N
IFPC_TXD1
IFPC_TXD2_N
IFPC_TXD2
IFPD_TXC_N
IFPD_TXC
IFPD_TXD4_N
IFPD_TXD4
IFPD_TXD5_N
IFPD_TXD5
IFPD_TXD6_N
IFPD_TXD6
TMDS_TXCN 35
TMDS_TXCP 35
TMDS_TX0N 35
TMDS_TX0P 35
TMDS_TX1N 35
TMDS_TX1P 35
TMDS_TX2N 35
TMDS_TX2P 35
TMDS_TX3N 35
TMDS_TX3P 35
TMDS_TX4N 35
TMDS_TX4P 35
TMDS_TX5N 35
TMDS_TX5P 35
C2906 0.01UF/16V
R2902 1KOhm
GND at least 5 mils
+VRAM
35mA
L2902 220Ohm
+2.5VS_IFPCD_PLLVDD
C2910 4.7UF/6.3V
C2911 4.7UF/6.3V
C2912 4700PF/25V
C2913 470PF/50V
+3VS_IFPCD
L2904 220Ohm
300 mA
at least 15 mils
+3VS_IFPCD_IOVDD
C2918 4.7UF/6.3V
C2919 4700PF/25V
C2920 4700PF/25V
R2903 10KOhm
Add BackDrive
+3VS
Q2901 SI2301BDS_T1_E3
R2905 10KOhm
+3VS_IFPCD
C2921 4.7UF/6.3V
R2904 0Ohm
Q2902 2N7002K_T1_E3
R2906 0Ohm
8,17,30,59 PM_PWROK
U2401G
DACC_VDD
DACC_VREF
DACC_RSET
DACC_HSYNC
DACC_VSYNC
DACC_RED
DACC_GREEN
DACC_BLUE
DACC_IDUMP
I2CB_SCL
I2CB_SDA
DVI_DDC_CLK 35
DVI_DDC_DAT 35
R2907 10KOhm
TPC26T T2904
T2905 TPC26T
10/04
VGA
U2401F
DACA_VDD
DACA_VREF
DACA_RSET
DACA_HSYNC
DACA_VSYNC
DACA_RED
DACA_GREEN
DACA_BLUE
DACA_IDUMP
I2CA_SCL
I2CA_SDA
CRT_DDC_CLK 32
CRT_DDC_DAT 32
CRT_HSYNC 32
CRT_VSYNC 32
CRT_RED 32
CRT_GREEN 32
CRT_BLUE 32
L2905 220Ohm
135 mA
at least 8 mils
+3VS_DACA_VDD
C2922 4.7UF/6.3V
C2923 4700PF/25V
C2924 470PF/50V
C2925 0.01UF/16V
R2908 124Ohm 1%
R2922 33OHM
R2923 33OHM
R2919 50Ohm
R2920 50Ohm
R2921 50Ohm
TA-IR04TATNHBATNHBFTN1520
near GPU
TV
U2401H
DACB_VDD
DACB_VREF
DACB_RSET
DACB_RED
DACB_GREEN
DACB_BLUE
DACB_IDUMP
TV_C 35
TV_Y 35
TV_CVBS 35
L2906 220Ohm
200 mA
at least 8 mils
+3VS_DACB_VDD
C2926 4.7UF/6.3V
C2927 4700PF/25V
C2928 470PF/50V
C2929 0.01UF/16V
R2909 124Ohm 1%
R2912 50Ohm
R2913 50Ohm
R2914 50Ohm
TA-IR04TATNHBATNHBFTN1520
near GPU
HDCP
U2401E
NC14
NC15
NC16
NC17
NC18
GPIO13
NC19
NC20
DACB_CSYNC
GPIO14
NC21
NC22
ROMCS_N
ROM_SO
ROM_SI
ROM_SCLK
I2CH_SCL
I2CH_SDA
BUFRST_N
STEREO
SWAPRDY_A
NC23
TESTMODE
GND152
GND153
TESTMEMCLK
TESTMODE
T2906 TPC26T
T2907 TPC26T
T2908 TPC26T
10/04
U2901
HDCPROMSDA
HDCPROMSCL
+3VS_HDCPOROM
C2930 0.1UF/10V
BOM CHANGE TO 05G020001301
R2915 10KOhm
R2916 10KOhm
R2917 10KOhm
R2911 10KOhm
R2910 10KOhm
<< Kennedy Zhang >>
ASUS
Title : G86M(6)_LVDS&VGA&TV
ASUSTek COMPUTER INC
Engineer: Gajun_Ho
Size Custom
Project Name F3Sc
Rev 2.0
Date: 星期二, 三月 21, 2007
Sheet 29 of 95

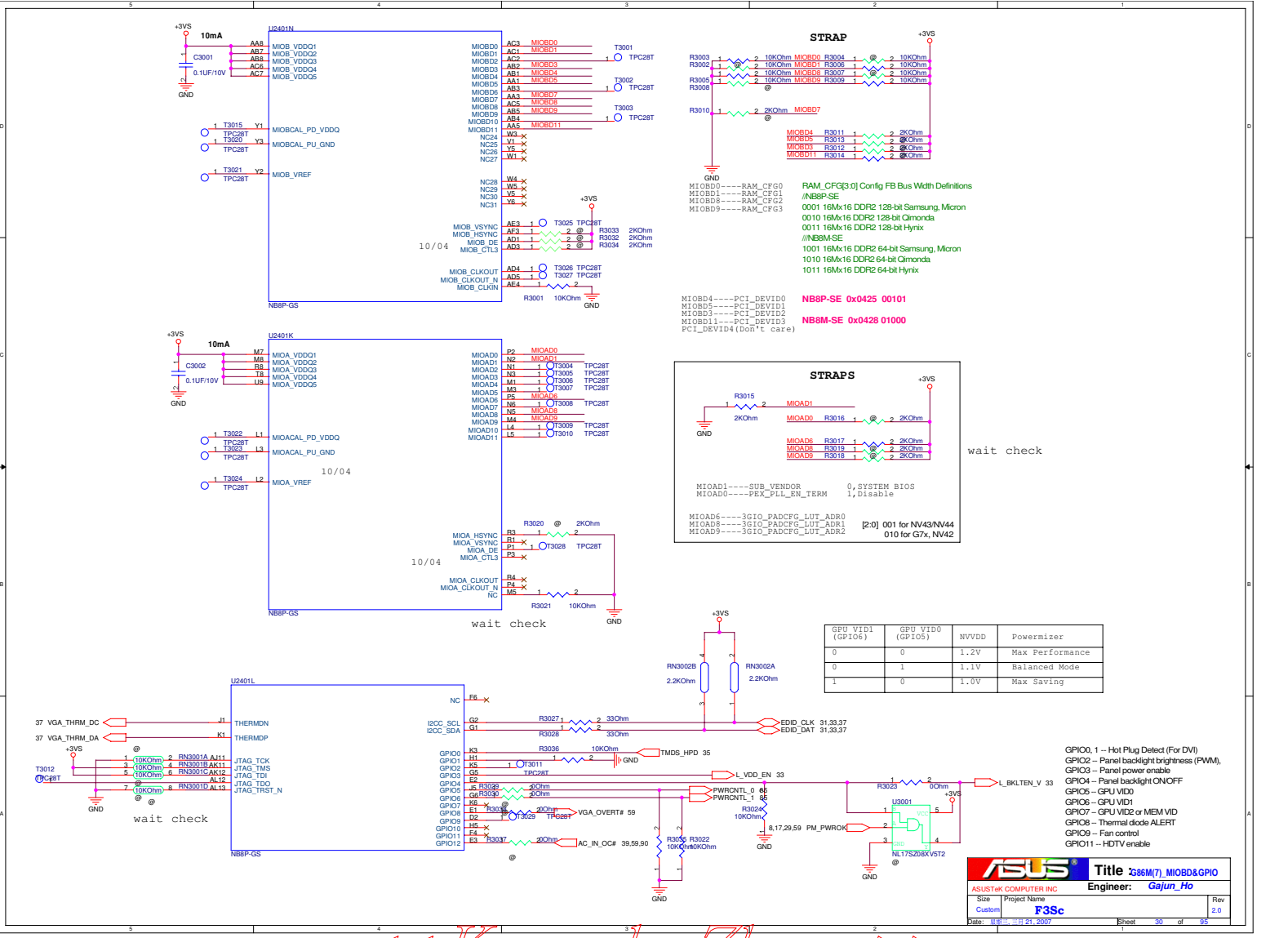


| GPU VID1 (GPIO6) | GPU VID0 (GPIO5) | NVVDD | Powermizer |
|---|---|---|---|
| 0 | 0 | 1.2V | Max Performance |
| 0 | 1 | 1.1V | Balanced Mode |
| 1 | 0 | 1.0V | Max Saving |

<< Kennedy_Zhang >>

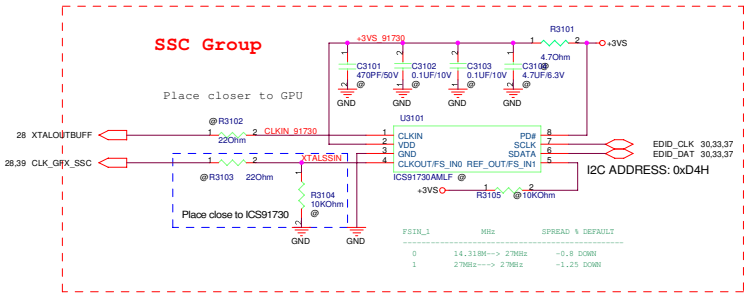


| | | |
|---|---|---|
| ASUSTeK COMPUTER INC | Title : G86M(8)-SSC | |
| | Engineer: Gajun_Ho | |
| Size: Custom | Project Name: F3Sc | Rev: 2.0 |
| Date: 星期三, 二月 21, 2007 | Sheet 31 of 95 | |

<< Kennedy_Zhang >>

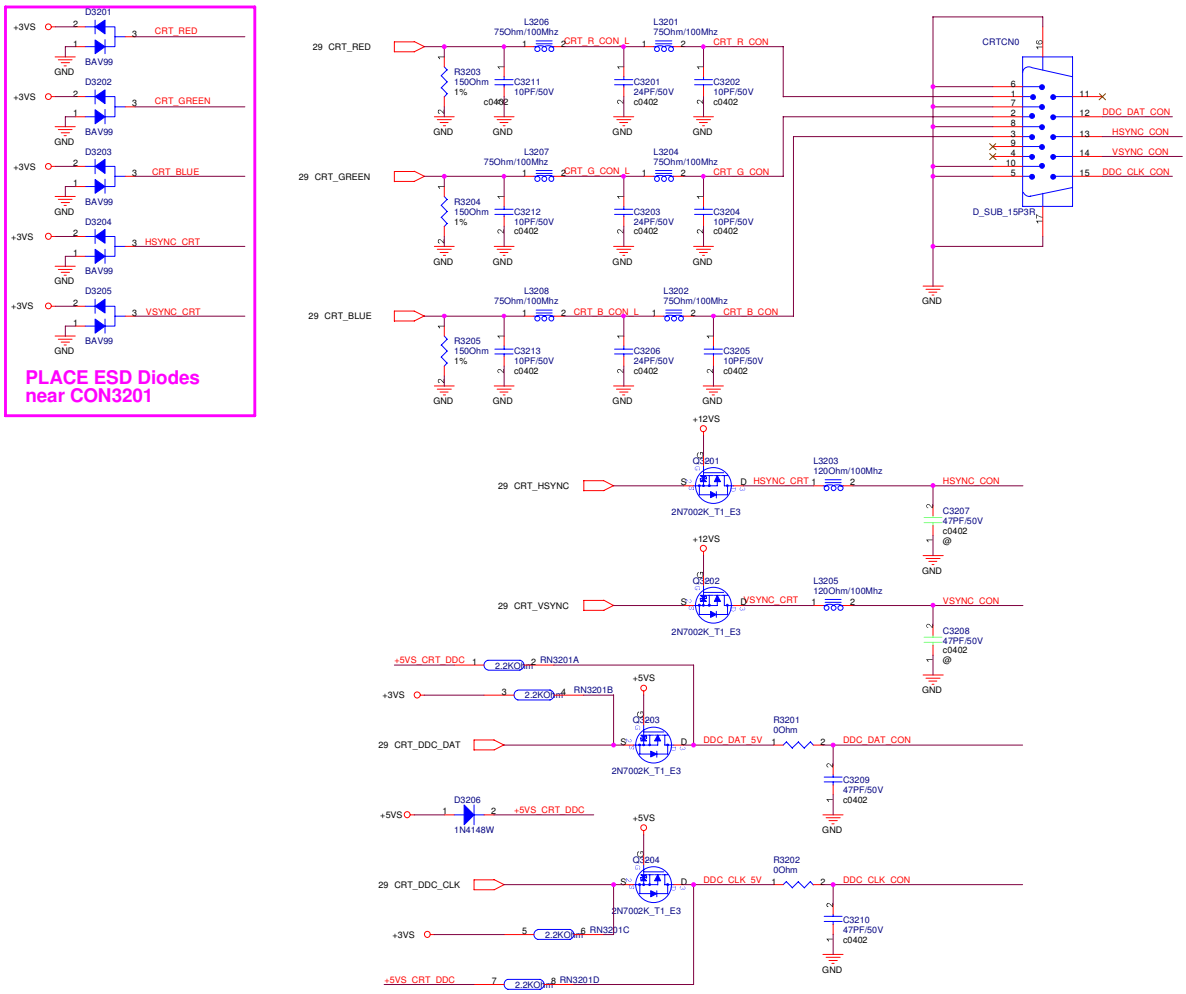


| | | |
|---|---|---|
| ASUSTeK COMPUTER INC | Title : CRT | Engineer: Gajun_Ho |
| Size: Custom | Project Name: F3Sc | Rev: 2.0 |
| Date: 星期三, 三月 21, 2007 | Sheet 32 of 95 | |

<< Kennedy_Zhang >>

# LCD Power

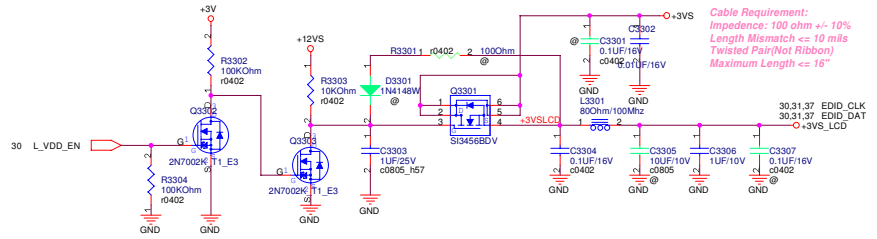


*Cable Requirement:*
*Impedence: 100 ohm +/- 10%*
*Length Mismatch <= 10 mils*
*Twisted Pair(Not Ribbon)*
*Maximum Length <= 16"*

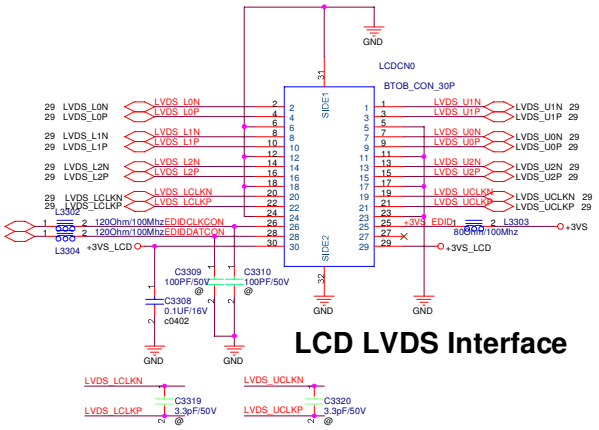


# LCD LVDS Interface




# LCD Backlight Control

*INVERTER Interface/Speaker CONN.*

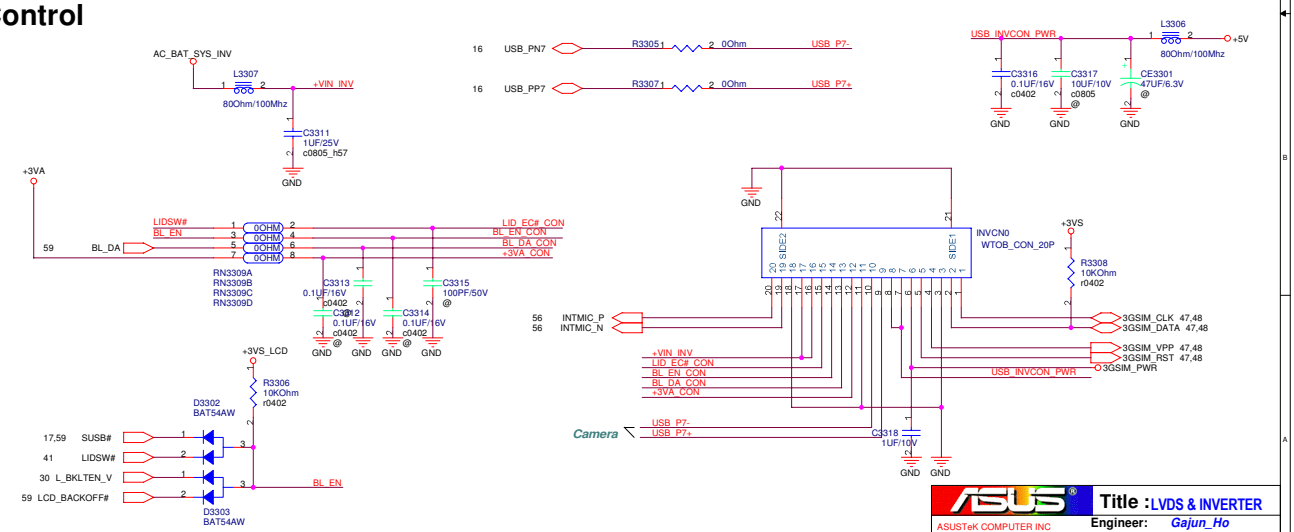


| | | |
|---|---|---|
| ASUS | Title : LVDS & INVERTER | |
| ASUSTeK COMPUTER INC | Engineer: Gajun_Ho | |
| Size: Custom | Project Name: F3Sc | Rev: 2.0 |
| Date: 星期三, 二月 21, 2007 | Sheet 33 of 95 | |

<< Kennedy_Zhang >>

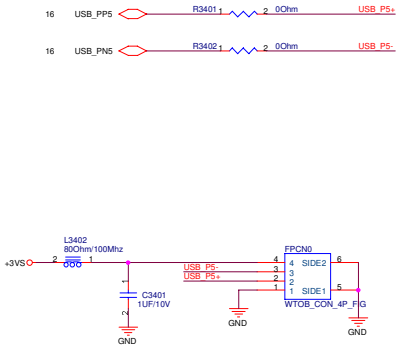


<Variant Name>

| | | |
|---|---|---|
| ASUSTeK COMPUTER INC | Title : FINGER PRINT | |
| | Engineer: Jack Chen | |
| Size: Custom | Project Name: F3Sc | Rev: 2.0 |
| Date: 星期三, 二月 21, 2007 | Sheet 34 of 95 | |

<< Kennedy_Zhang >>

## TV OUT

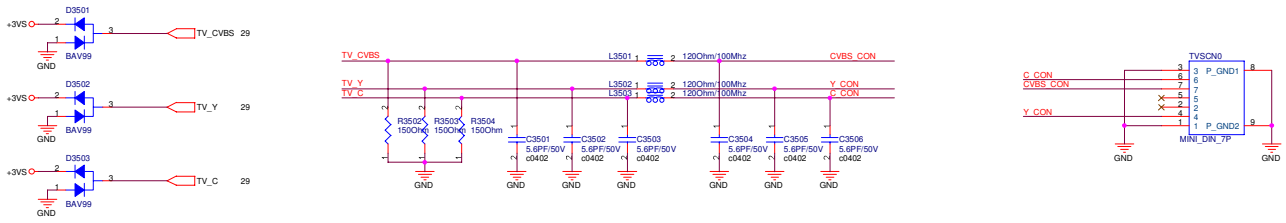


PLACE ESD
Diodes near
TV port

## DVI

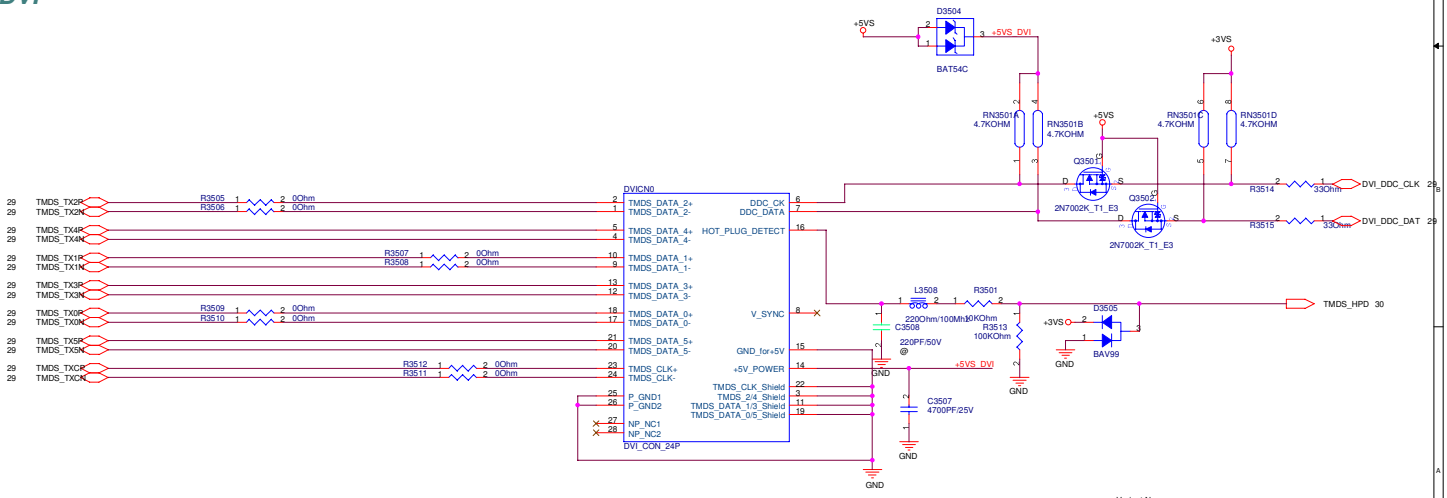


<Variant Name>

| | | |
|---|---|---|
| ASUSTeK COMPUTER INC | Title : TV OUT & DVI CON. | |
| | Engineer: Gajun_Ho | |
| Size: Custom | Project Name: F3Sc | Rev: 2.0 |
| Date: 月日三, 三月 21, 2007 | Sheet 35 of 95 | |


<< Kennedy_Zhang >>

<Variant Name>

| | | | |
|---|---|---|---|
| ASUSTeK COMPUTER INC | Title : Schematic page name | | |
| | Engineer: Gajun_Ho | | |
| Size: Custom | Project Name: F3Sc | | Rev: 2.0 |
| Date: 星期三, 十月 21, 2007 | Sheet 36 of 95 | | |

<< Kennedy_Zhang >>

## Thermal Sensor

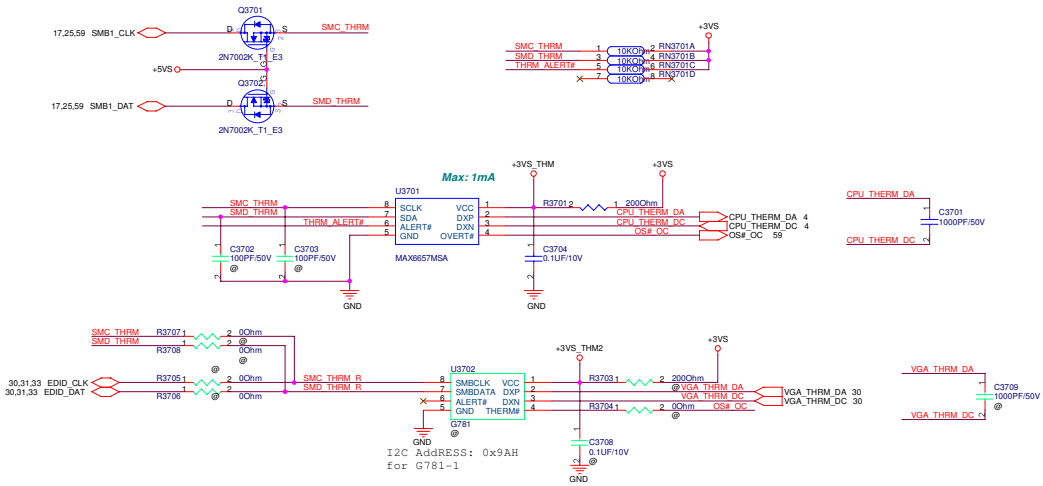





## DC FAN Control

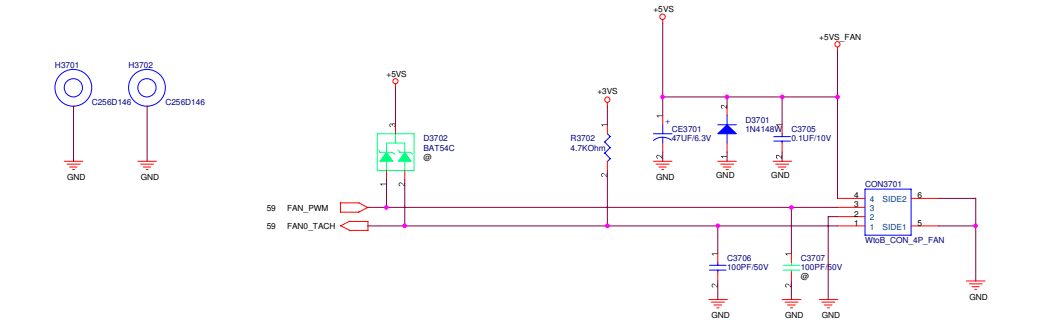


<Variant Name>

| | | |
|---|---|---|
| ASUS | Title : THER SENSOR & FAN | |
| ASUSTeK COMPUTER INC. NB1 | Engineer: Gajun_Ho | |
| Size: Custom | Project Name: F3Sc | Rev: 2.0 |
| Date: 月日, 二月 21, 2007 | Sheet 37 of 95 | |

<< Kennedy_Zhang >>

<Variant Name>

| | | | |
|---|---|---|---|
| ASUSTeK COMPUTER INC | Title : Schematic page name | | |
| | Engineer: Gajun_Ho | | |
| Size: Custom | Project Name: F3Sc | | Rev: 2.0 |
| Date: 星期三, 十月 21, 2007 | Sheet 38 of 95 | | |

<< Kennedy_Zhang >>

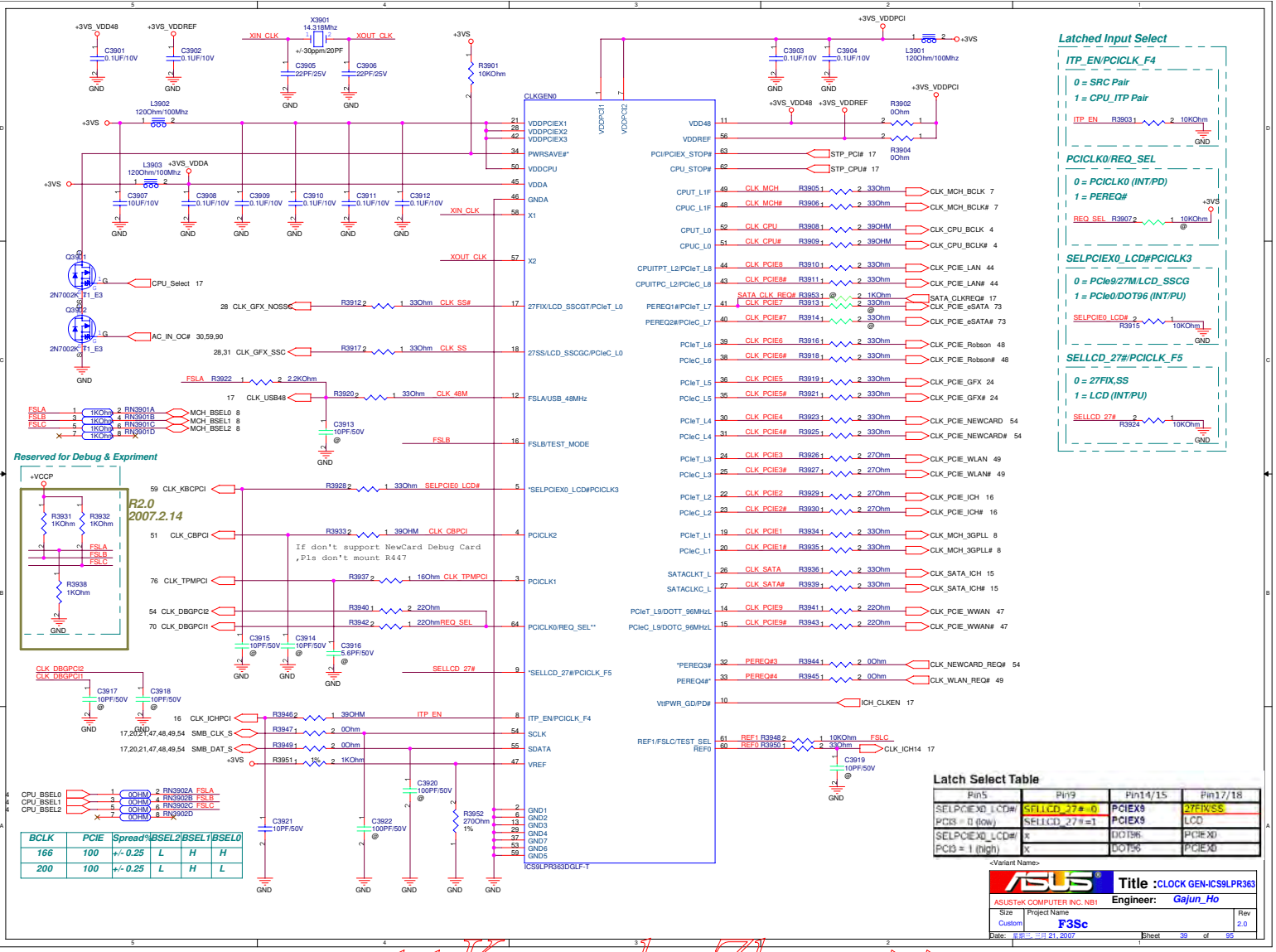


| BCLK | PCIE | Spread% | BSEL2 | BSEL1 | BSEL0 |
|---|---|---|---|---|---|
| 166 | 100 | +/- 0.25 | L | H | H |
| 200 | 100 | +/- 0.25 | L | H | L |

<< Kennedy_Zhang >>

<Variant Name>

| | | |
|---|---|---|
| ASUSTeK COMPUTER INC | Title : Schematic page name | |
| | Engineer: Gajun_Ho | |
| Size: Custom | Project Name: F3Sc | Rev: 2.0 |
| Date: 星期三, 十月 21, 2007 | Sheet 40 of 95 | |

<< Kennedy_Zhang >>

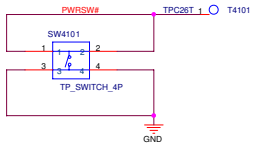


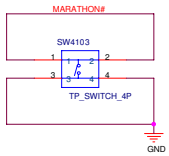


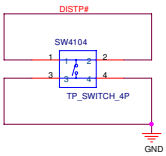


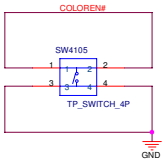


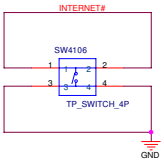


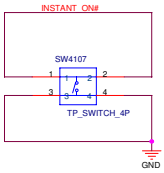


R1.1 2006.12.8

**For Switch**

## PWR SWITCH

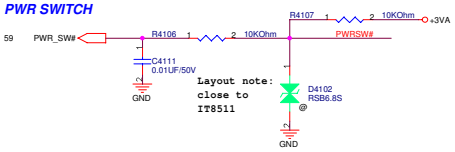


## SHUT_DOWN#

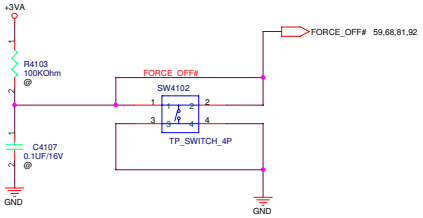


## LID SWITCH




**Note:**

This LID_EC# is a signal from inverter board, it is easy to cause high voltage damage when plugging inverter board connector to M/B with AC present. It needed to add bidirectional diode to protect this pin.

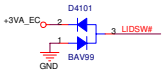


Layout note:
close to
connector

## RF ON SWITCH




R1.1 2006.12.8

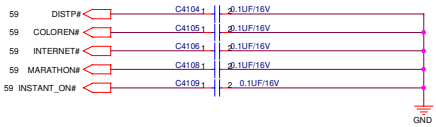


<Variant Name>

| | | |
|---|---|---|
| ASUS | Title : Power on & Res Freq | |
| ASUSTeK COMPUTER INC | Engineer: Gajun_Ho | |
| Size: Custom | Project Name: F3Sc | Rev: 2.0 |
| Date: 月日, 年日 21, 2007 | Sheet 41 of 95 | |

<< Kennedy_Zhang >>

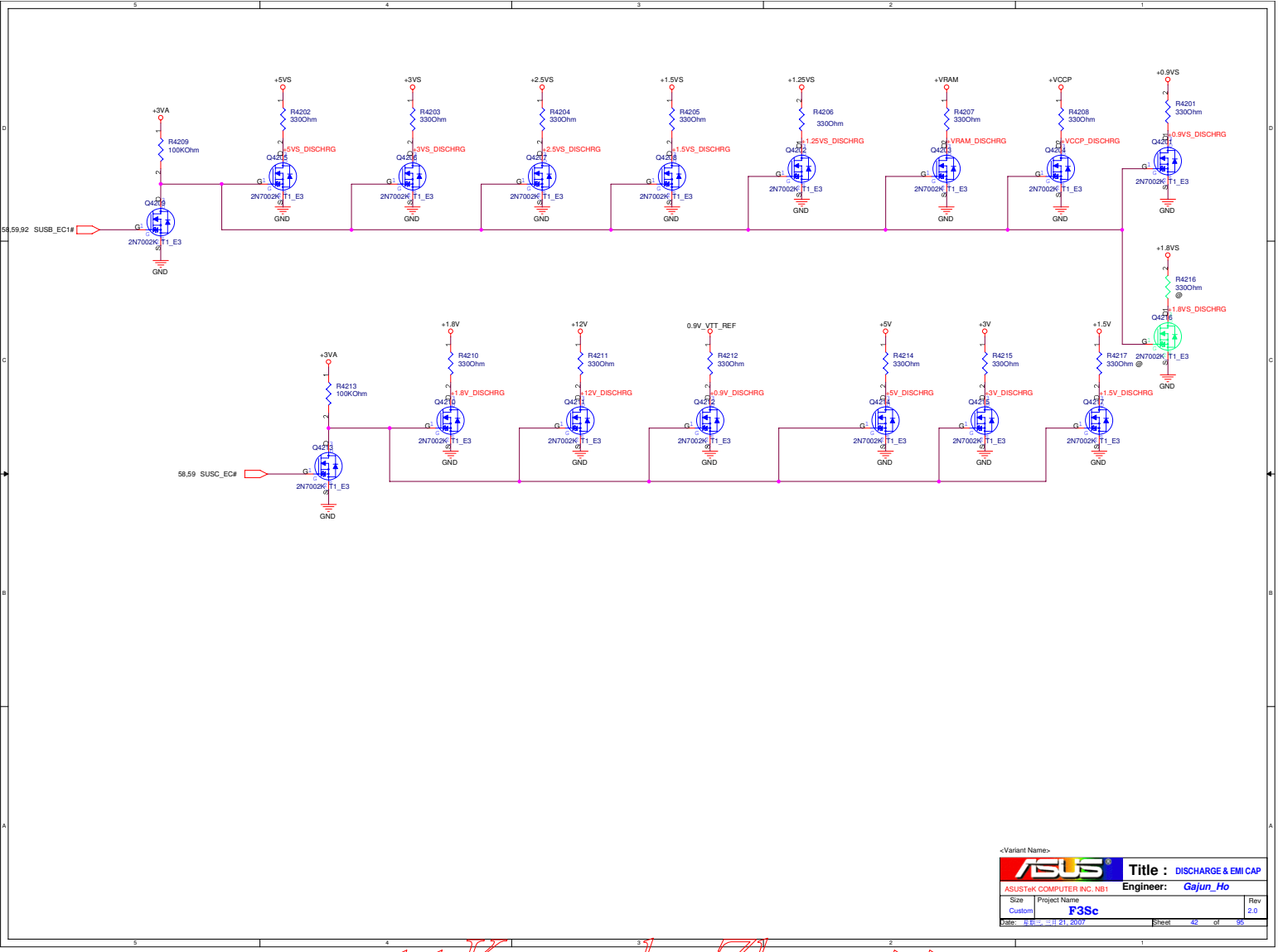


<Variant Name>

| | | |
|---|---|---|
| ASUSTeK COMPUTER INC. NB1 | Title : DISCHARGE & EMI CAP | |
| | Engineer: Gajun_Ho | |
| Size: Custom | Project Name: F3Sc | Rev: 2.0 |
| Date: 月日, 年 21, 2007 | Sheet 42 of 95 | |

<< Kennedy_Zhang >>

<Variant Name>

| | | |
|---|---|---|
| ASUSTeK COMPUTER INC | Title : Schematic page name | |
| | Engineer: Gajun_Ho | |
| Size: Custom | Project Name: F3Sc | Rev: 2.0 |
| Date: 星期三, 十月 21, 2007 | Sheet 43 of 95 | |

<< Kennedy_Zhang >>

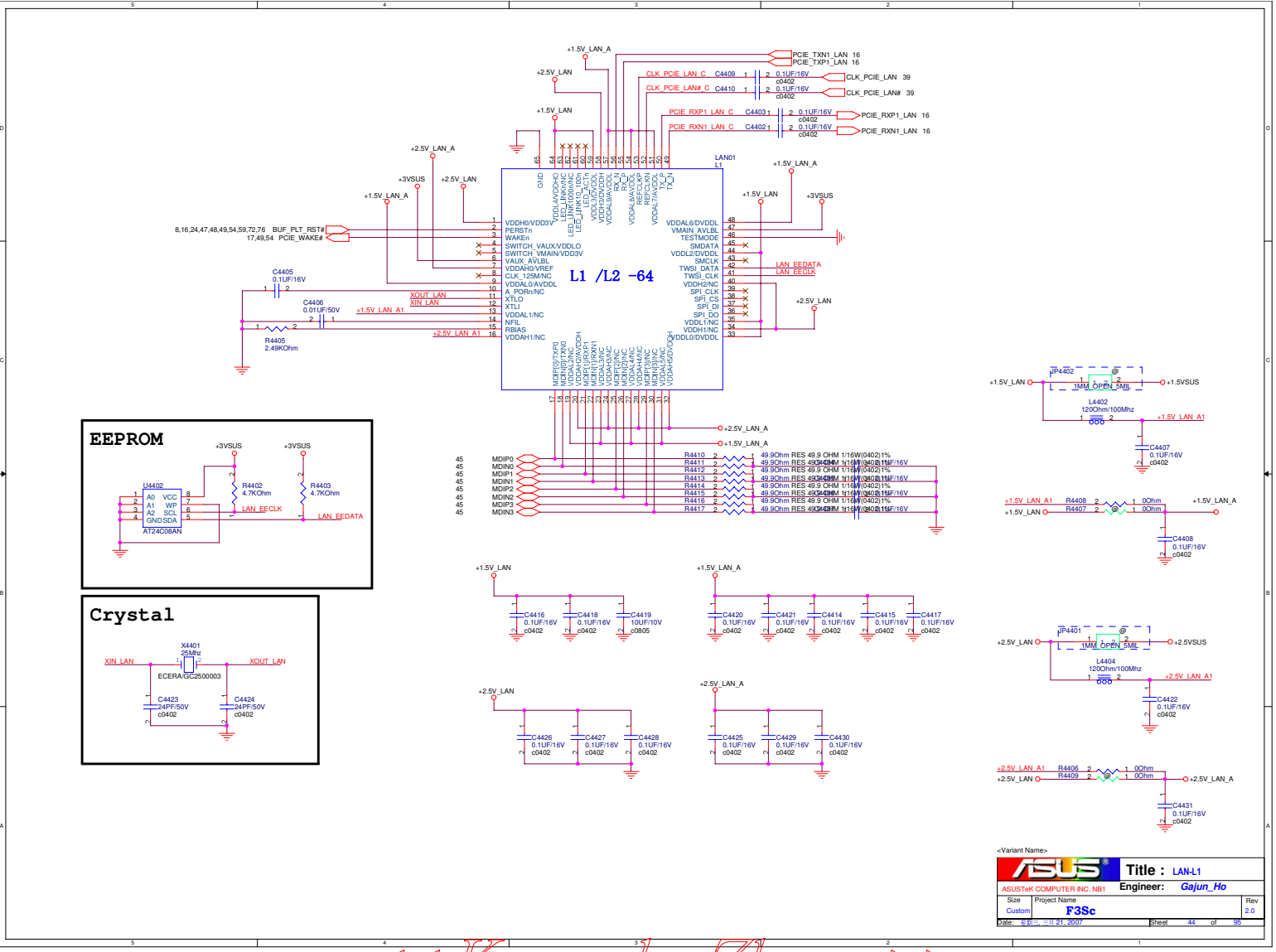


<< Kennedy_Zhang >>

Change to
13GN7510M270

## MDC CONN.

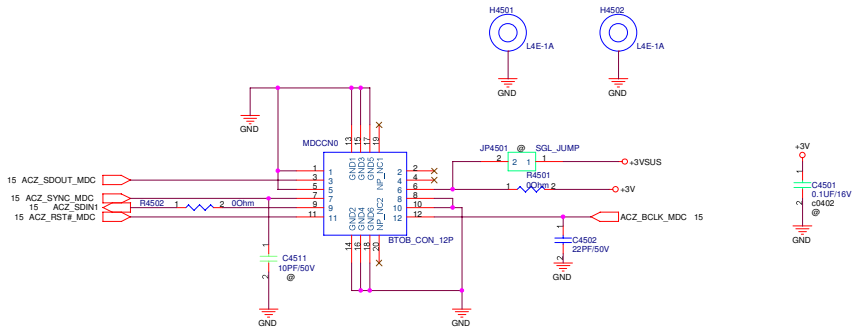


## LAN CONN.

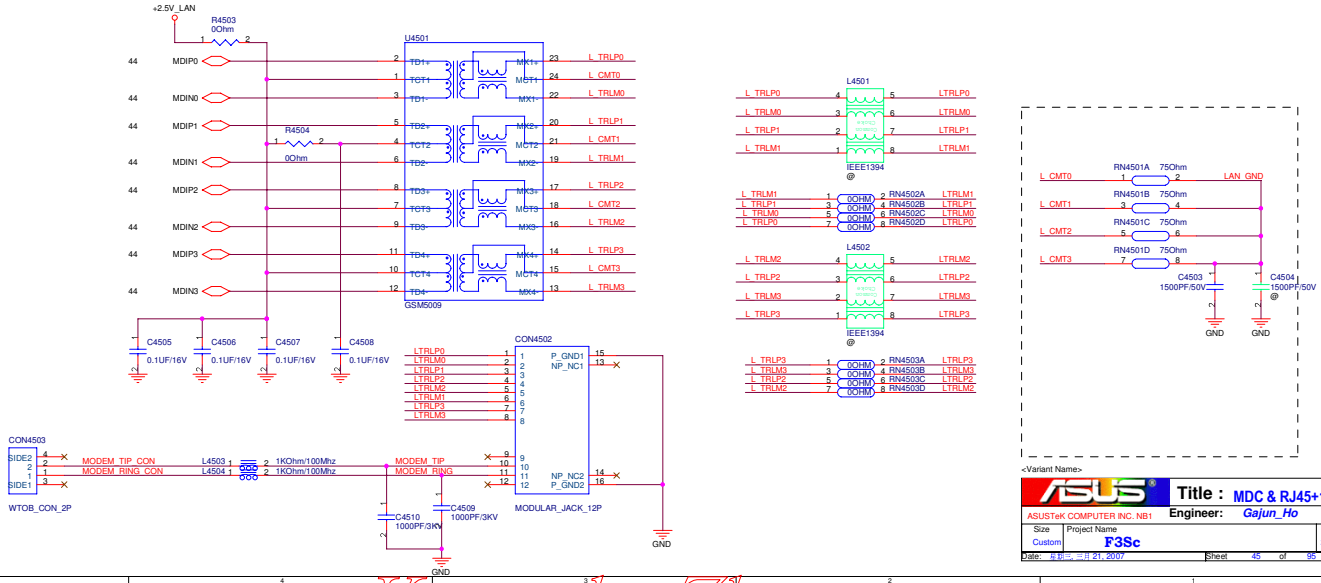


<< Kennedy_Zhang >>

<Variant Name>

| | | |
|---|---|---|
| ASUSTeK COMPUTER INC | Title : Schematic page name | |
| | Engineer: Gajun_Ho | |
| Size: Custom | Project Name: F3Sc | Rev: 2.0 |
| Date: 星期三, 十月 21, 2007 | Sheet 46 of 95 | |

<< Kennedy_Zhang >>

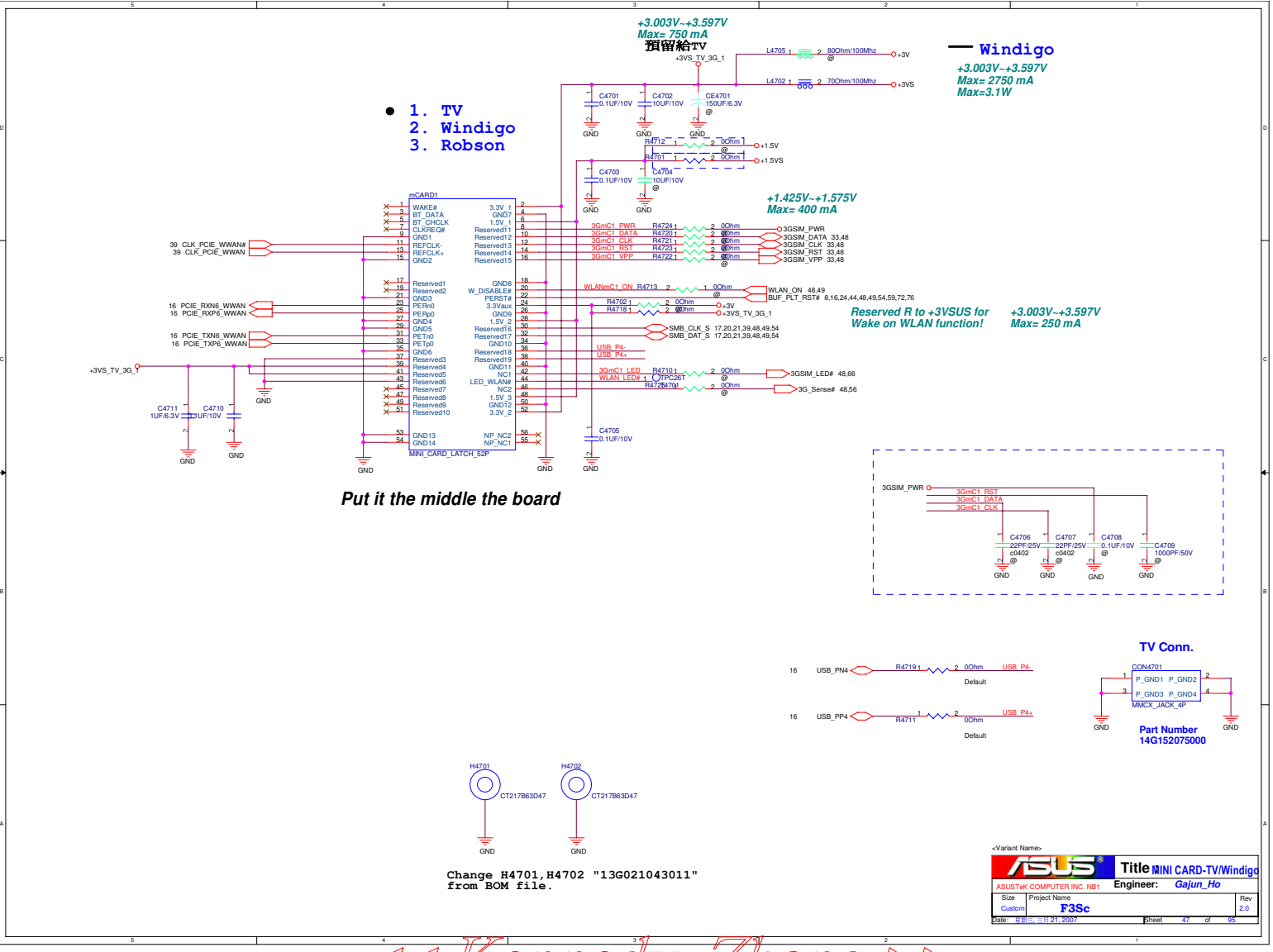


<< Kennedy_Zhang >>

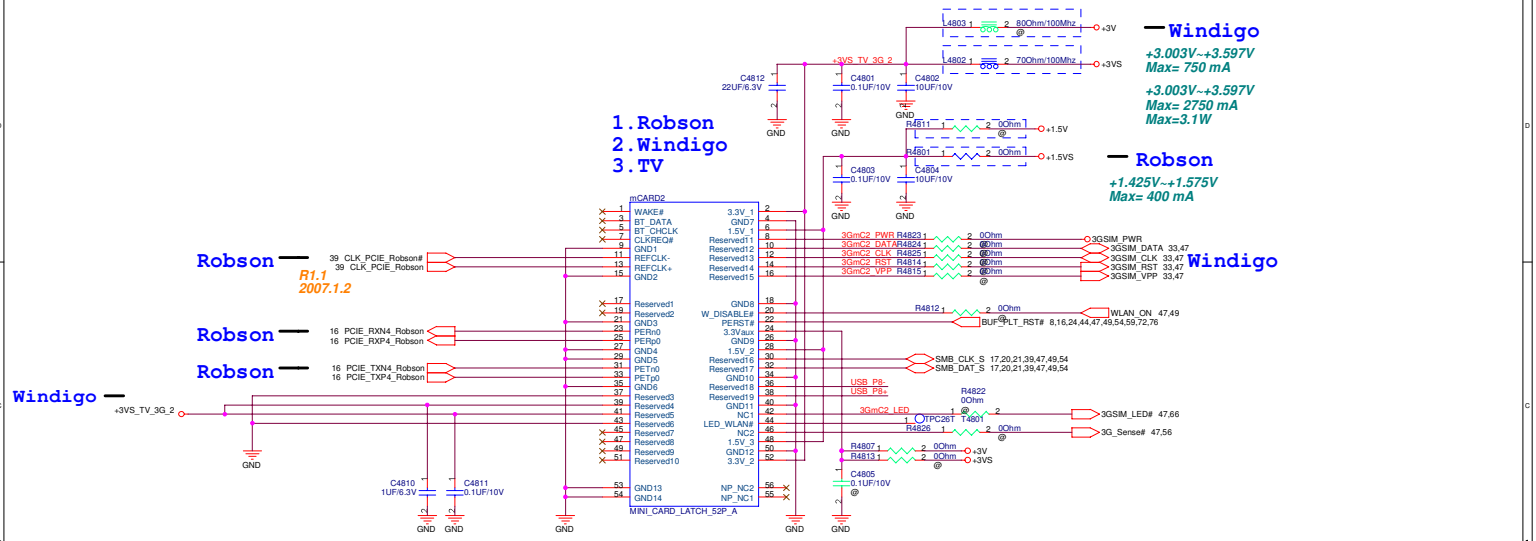


*The top side depends on CD-ROM connect to put the board*

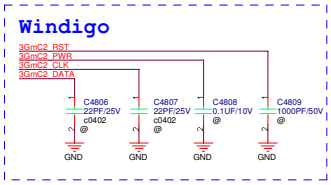


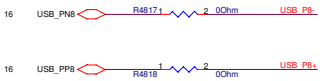


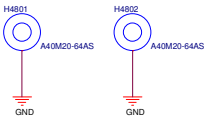


<Variant Name>

| | | |
|---|---|---|
| ASUSTeK COMPUTER INC. NB1 | Title : MINI CARD-Robson | |
| | Engineer: Gajun_Ho | |
| Size: Custom | Project Name: F3Sc | Rev: 2.0 |
| Date: 月日, 二月 21, 2007 | Sheet 48 of 95 | |

<< Kennedy_Zhang >>

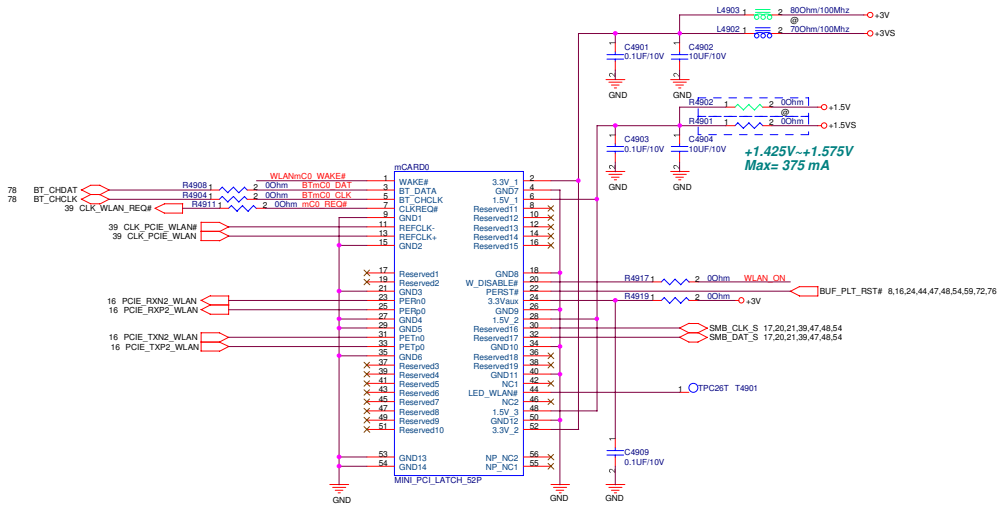


***The left side depends on TV connect to put the board***

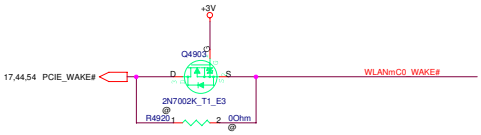


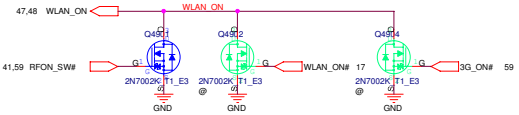


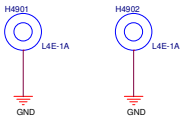


<Variant Name>

| | | |
|---|---|---|
| ASUSTeK COMPUTER INC. NB1 | Title : MINI CARD-Kedron | |
| | Engineer: Gajun_Ho | |
| Size: Custom | Project Name: F3Sc | Rev: 2.0 |
| Date: 月日, 二月 21, 2007 | Sheet 49 of 95 | |

<< Kennedy_Zhang >>

<Variant Name>

| | | |
|---|---|---|
| ASUSTeK COMPUTER INC | Title : Schematic page name | |
| | Engineer: Gajun_Ho | |
| Size: Custom | Project Name: F3Sc | Rev: 2.0 |
| Date: 星期三, 三月 21, 2007 | Sheet 50 of 95 | |

<< Kennedy_Zhang >>

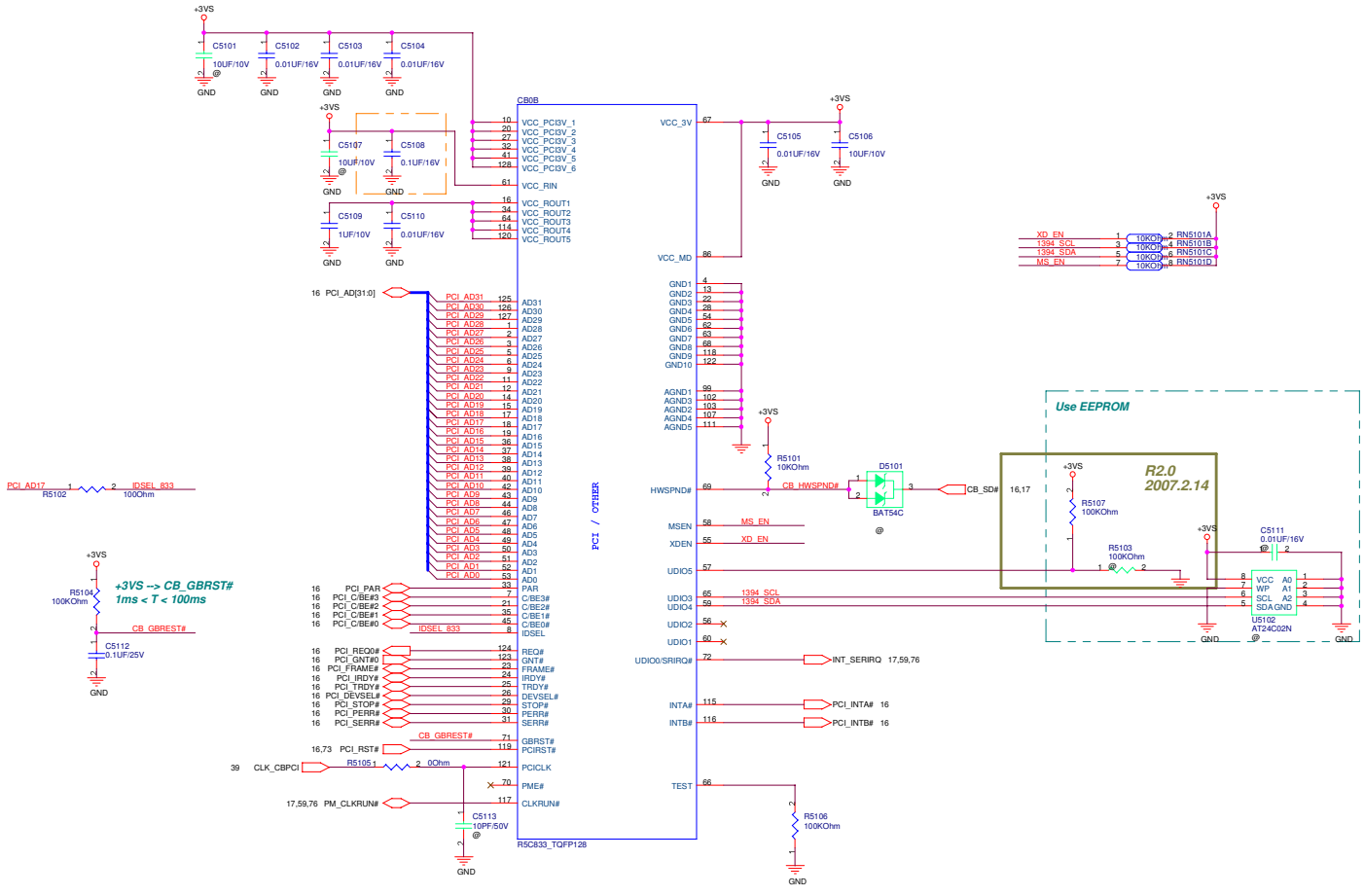


<Variant Name>

| | | |
|---|---|---|
| ASUSTeK COMPUTER INC. NB1 | Title : CARD1394-R5C833(1) | |
| | Engineer: Gajun_Ho | |
| Size: Custom | Project Name: F3Sc | Rev: 2.0 |
| Date: 月日二, 二月 21, 2007 | Sheet 51 of 95 | |

<< Kennedy_Zhang >>

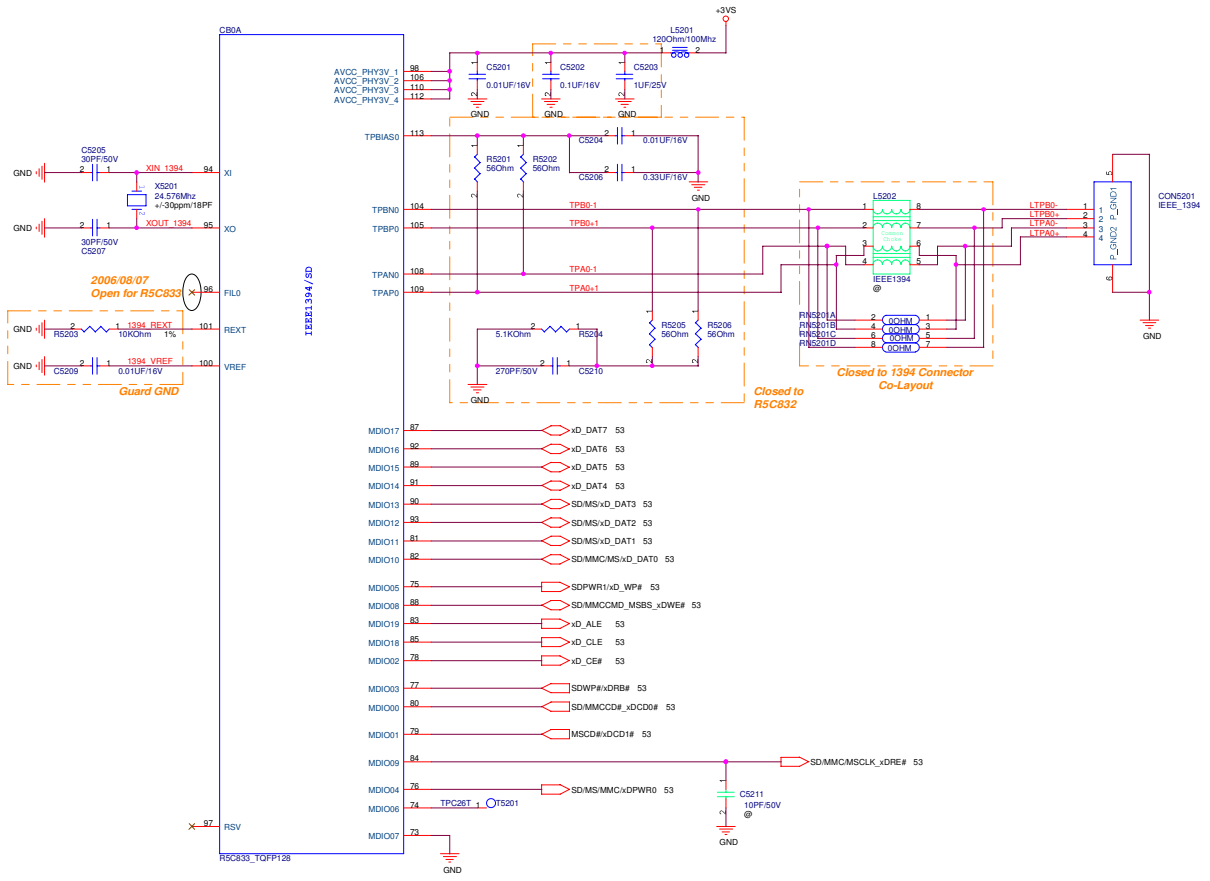


<Variant Name>

| | | |
|---|---|---|
| ASUSTeK COMPUTER INC. NB1 | Title : CARD1394-R5C832(2) | |
| | Engineer: Gajun_Ho | |
| Size: Custom | Project Name: F3Sc | Rev: 2.0 |
| Date: 月日, 年 21, 2007 | Sheet 52 of 95 | |

<< Kennedy_Zhang >>

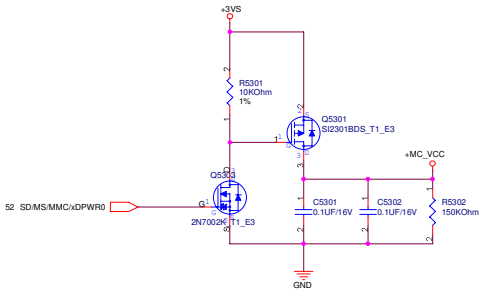


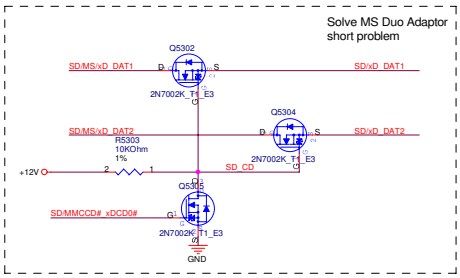


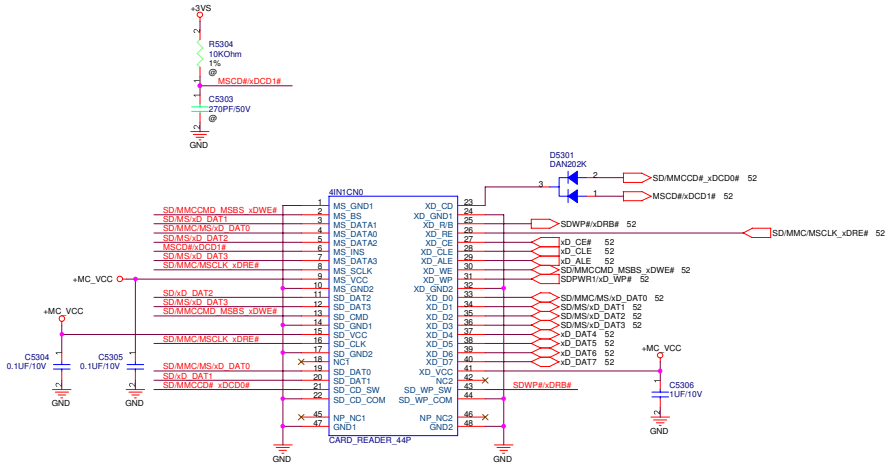


<Variant Name>

| | | |
|---|---|---|
| ASUS | Title: 4 in 1 CARD READER | |
| ASUSTeK COMPUTER INC | Engineer: Gajun_Ho | |
| Size: Custom | Project Name: F3Sc | Rev: 2.0 |
| Date: 星期三, 二月 21, 2007 | Sheet 53 of 95 | |

<< Kennedy_Zhang >>

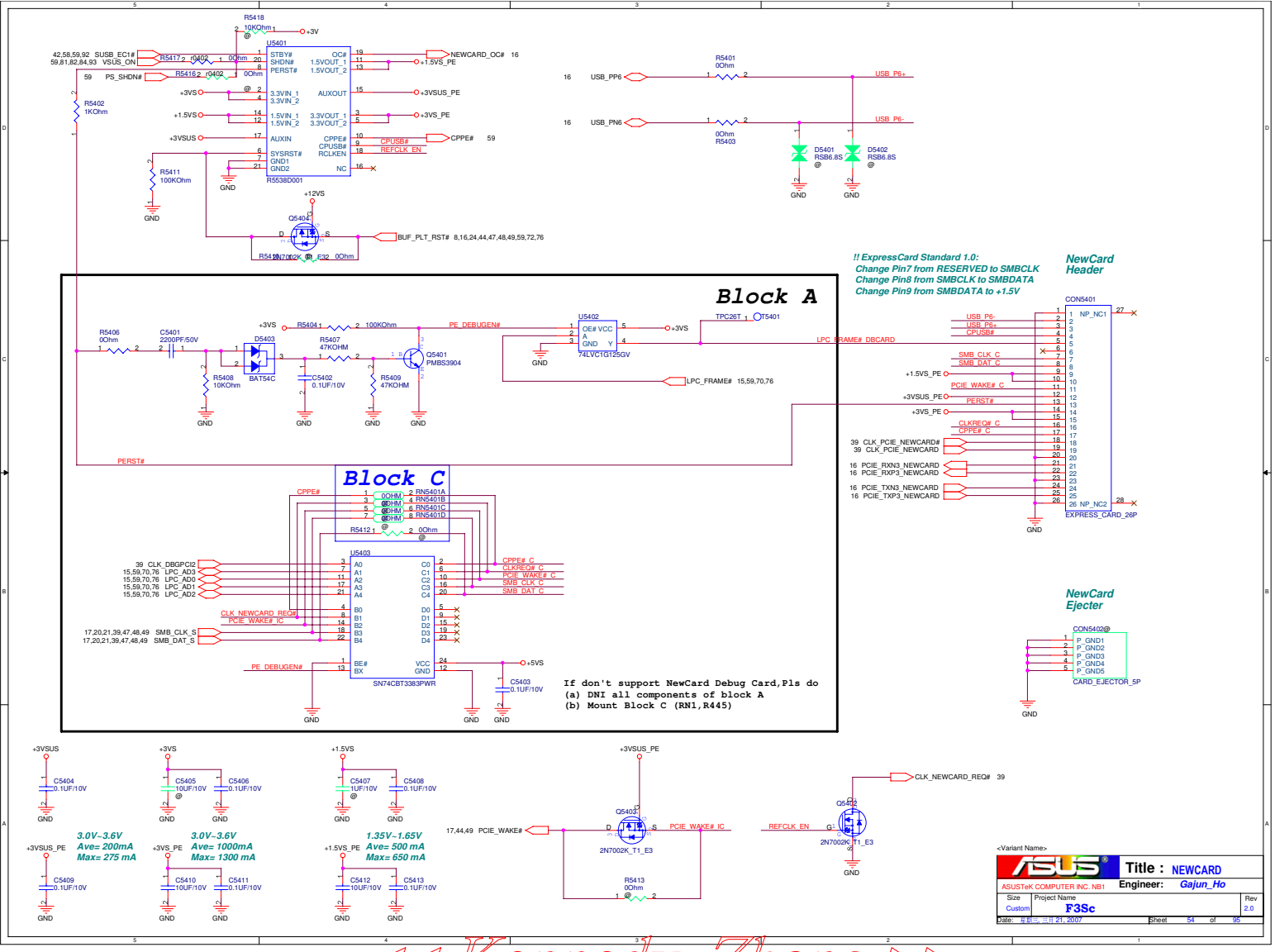


<< Kennedy_Zhang >>

<Variant Name>

| | | |
|---|---|---|
| ASUSTeK COMPUTER INC | Title : None | |
| | Engineer: Gajun_Ho | |
| Size: Custom | Project Name: F3Sc | Rev: 2.0 |
| Date: 星期三, 十月 21, 2007 | Sheet 55 of 95 | |

<< Kennedy_Zhang >>

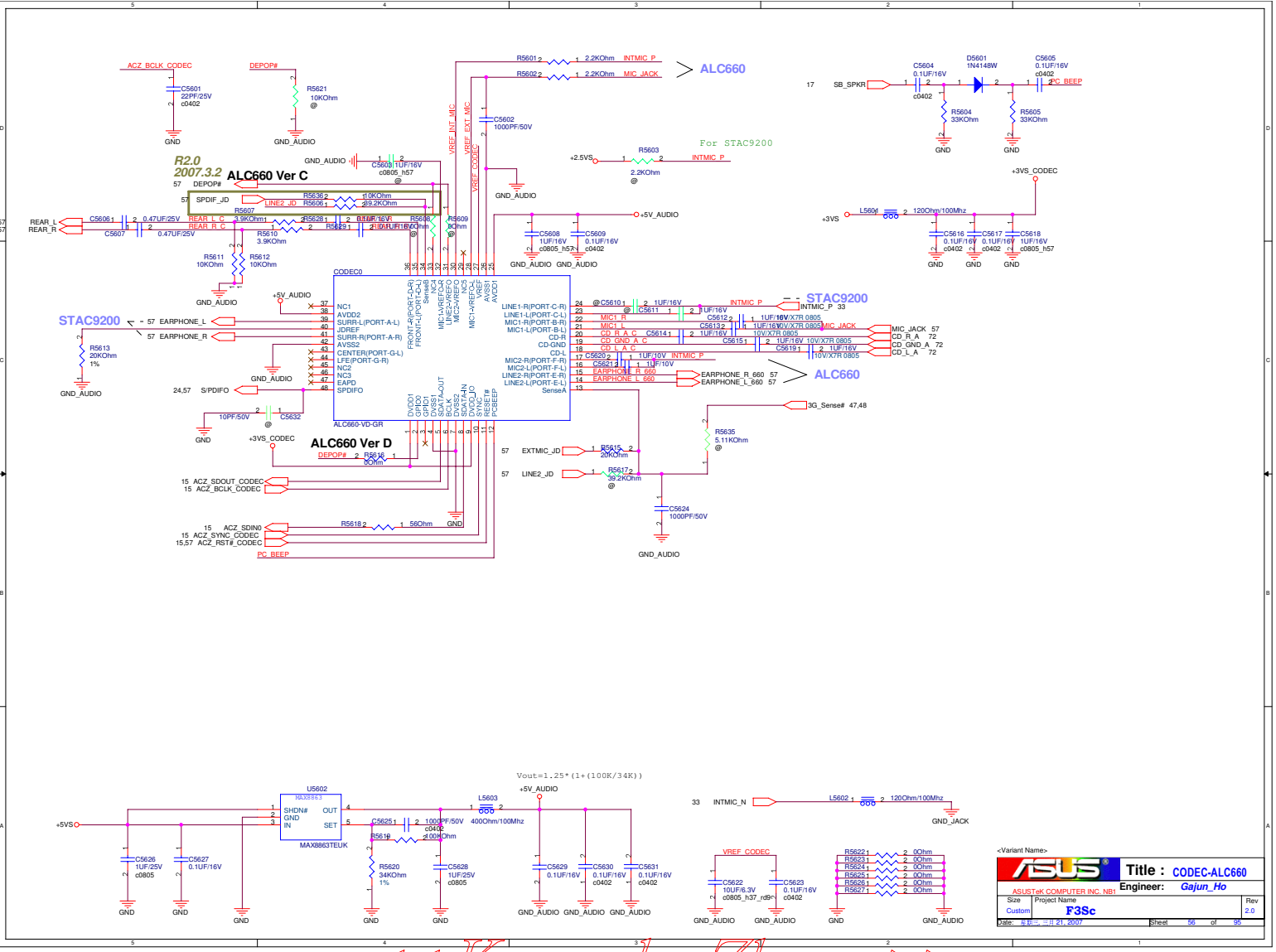


<< Kennedy_Zhang >>

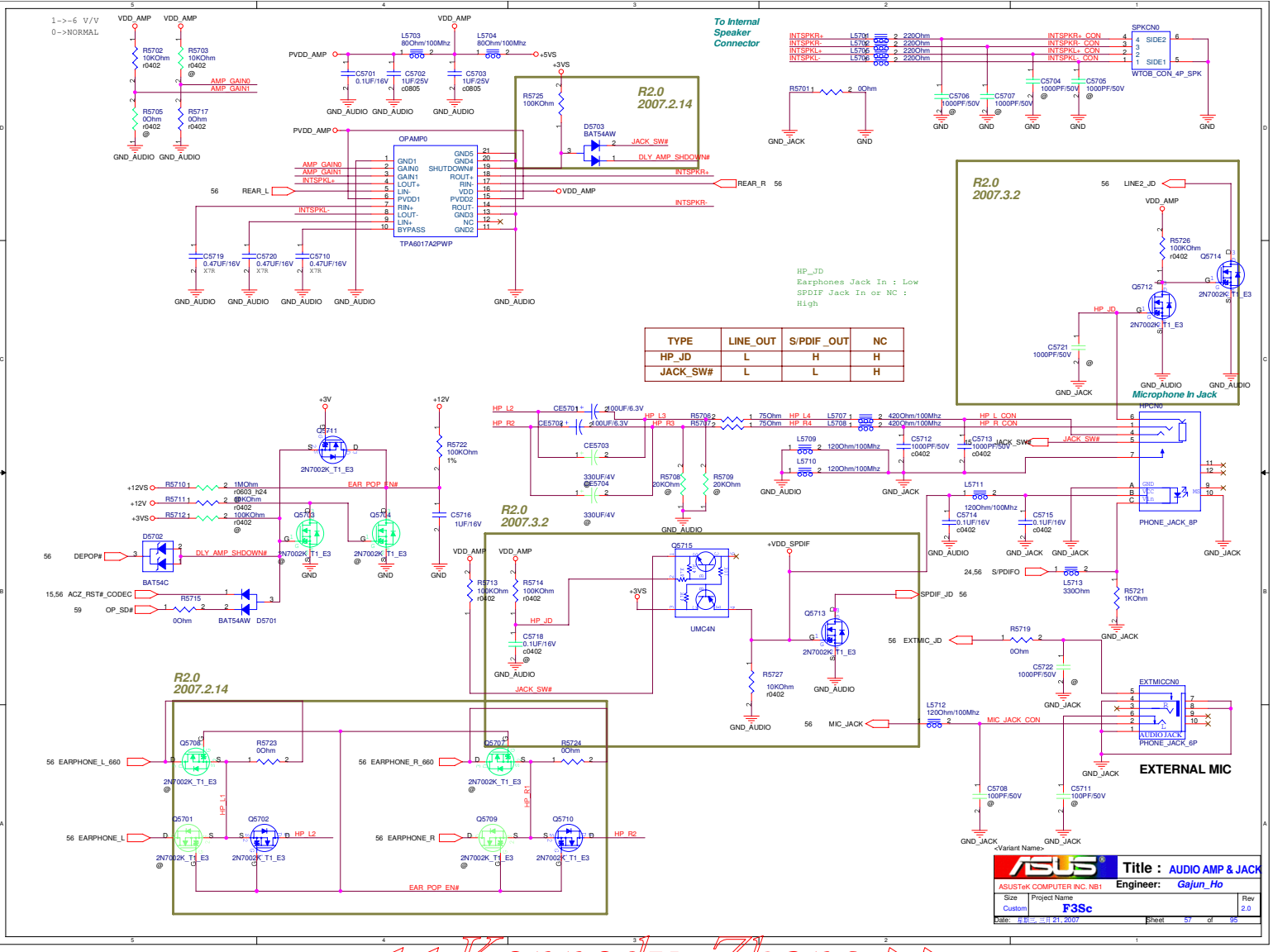


| TYPE | LINE_OUT | S/PDIF_OUT | NC |
|---|---|---|---|
| HP_JD | L | H | H |
| JACK_SW# | L | L | H |

<< Kennedy_Zhang >>

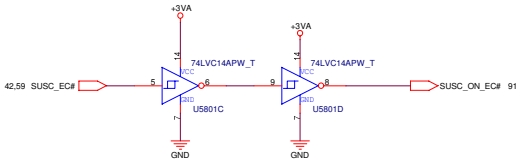


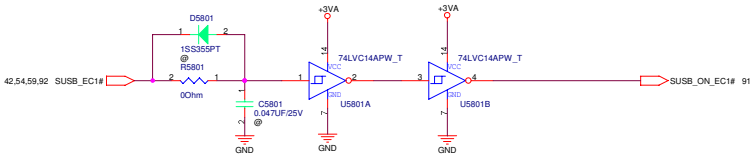


<Variant Name>

| | | |
|---|---|---|
| ASUSTeK COMPUTER INC | Title : Sequence Control Logic | |
| | Engineer: Gajun_Ho | |
| Size: Custom | Project Name: F3Sc | Rev: 2.0 |
| Date: 星期三, 二月 21, 2007 | Sheet 58 of 94 | |

<< Kennedy_Zhang >>

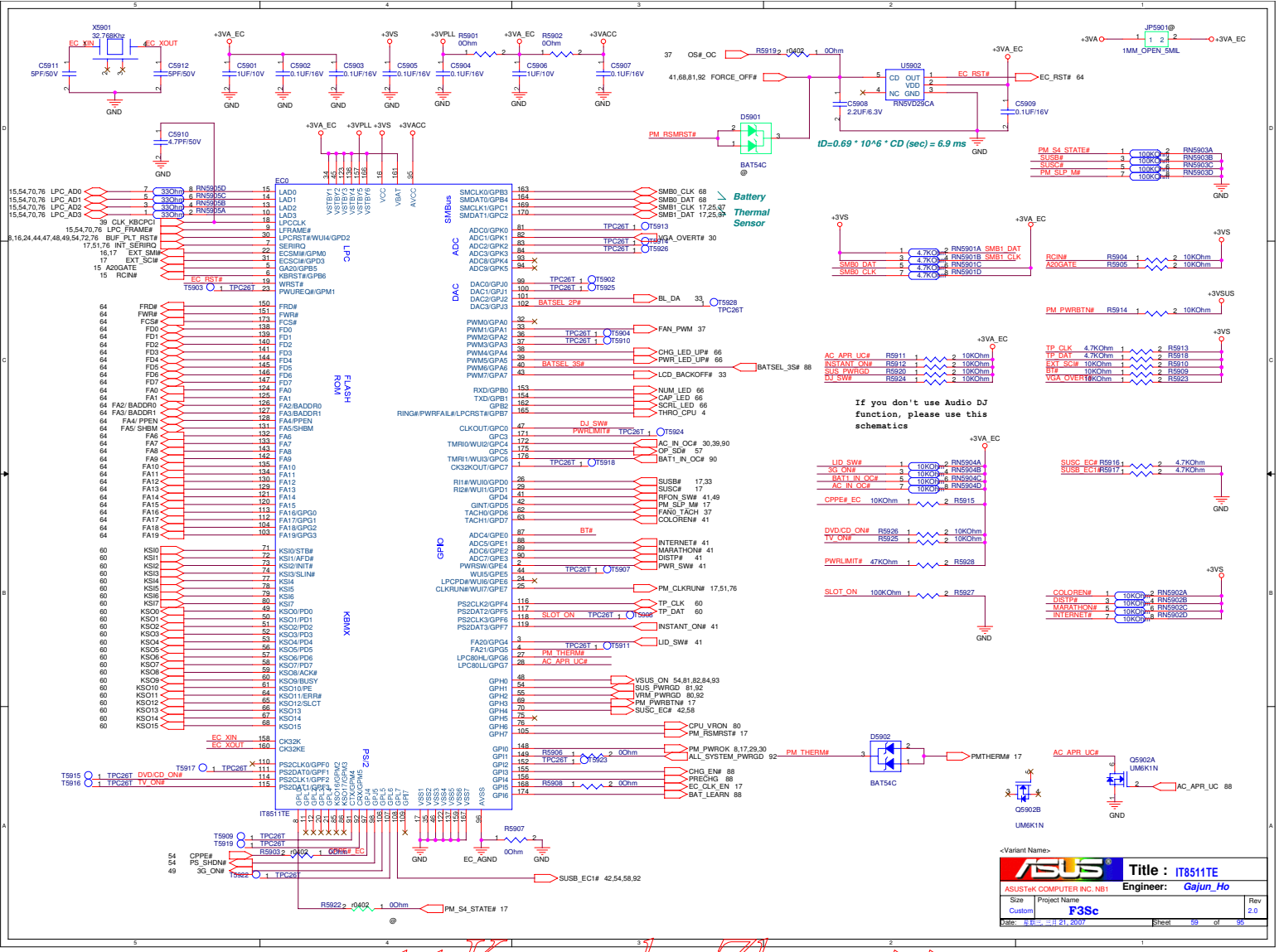


<< Kennedy_Zhang >>

## For Touch-Pad

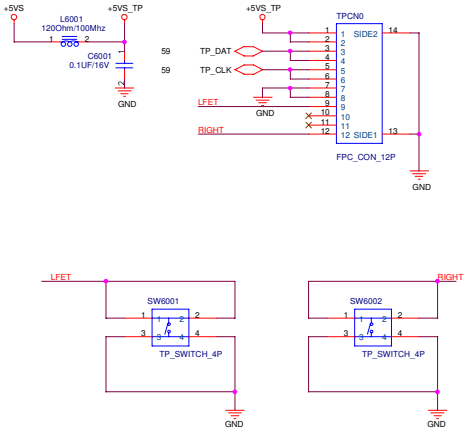


## For Keyboard(24Pin) Non KID

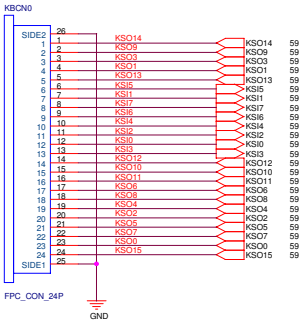


<Variant Name>

| | | |
|---|---|---|
| ASUSTeK COMPUTER INC. NB1 | Title : Touch Pad & KB | |
| | Engineer: Gajun_Ho | |
| Size: Custom | Project Name: F3Sc | Rev: 2.0 |
| Date: 月日, 年 21, 2007 | Sheet 60 of 95 | |


<< Kennedy_Zhang >>

<Variant Name>

| | | |
|---|---|---|
| ASUSTeK COMPUTER INC | Title : Schematic page name | |
| | Engineer: Gajun_Ho | |
| Size: Custom | Project Name: F3Sc | Rev: 2.0 |
| Date: 星期三, 三月 21, 2007 | Sheet 61 of 95 | |

<< Kennedy_Zhang >>

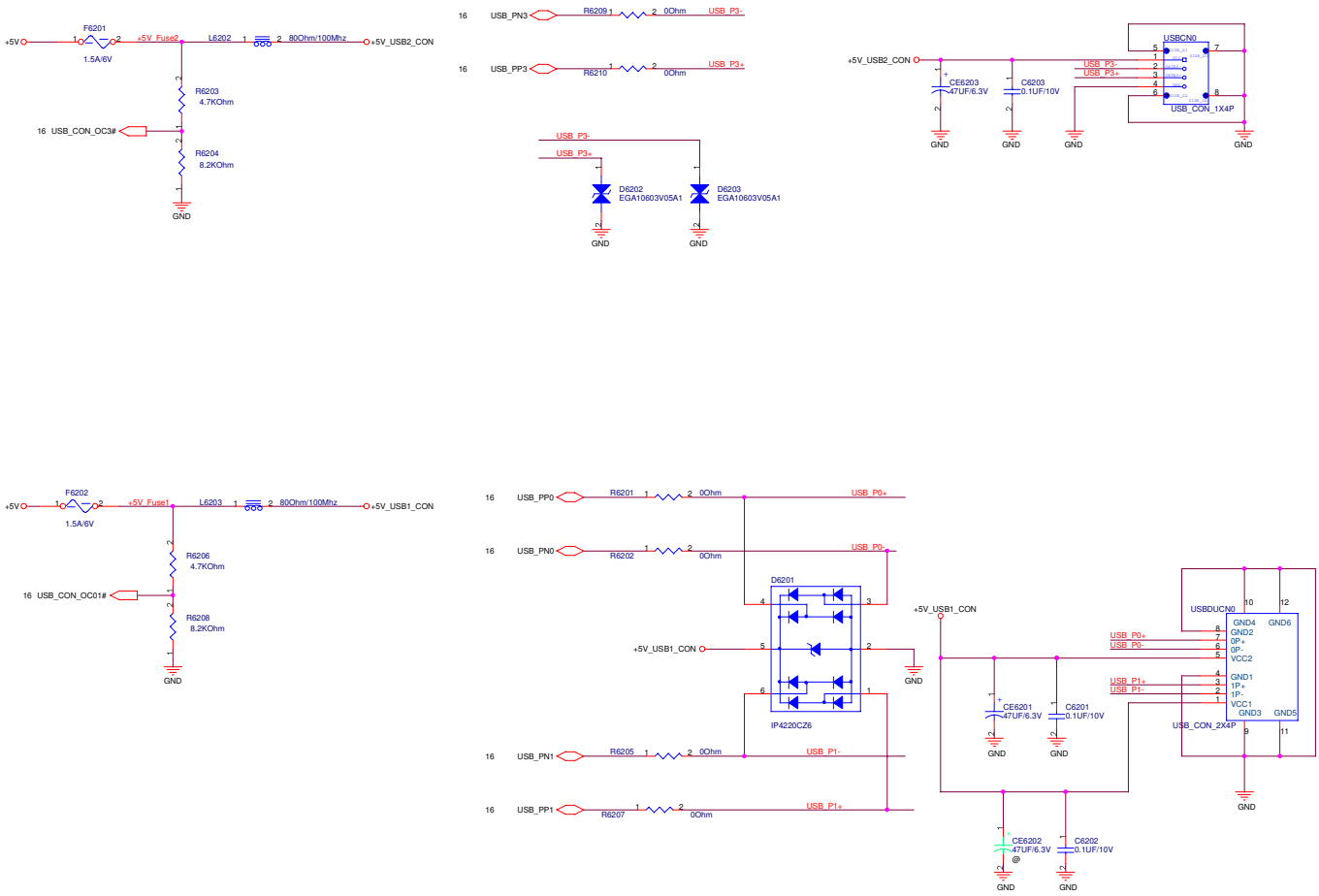


<Variant Name>

| | | |
|---|---|---|
| ASUSTeK COMPUTER INC | Title : USB CONN | |
| | Engineer: Gajun_Ho | |
| Size: Custom | Project Name: F3Sc | Rev: 2.0 |
| Date: 月日, 二月 21, 2007 | Sheet 62 of 95 | |

<< Kennedy_Zhang >>

<Variant Name>

| | | |
|---|---|---|
| ASUSTeK COMPUTER INC | Title : Schematic page name | |
| | Engineer: Gajun_Ho | |
| Size: Custom | Project Name: F3Sc | Rev: 2.0 |
| Date: 星期三, 十月 21, 2007 | Sheet 63 of 95 | |

<< Kennedy_Zhang >>

# ISA ROM

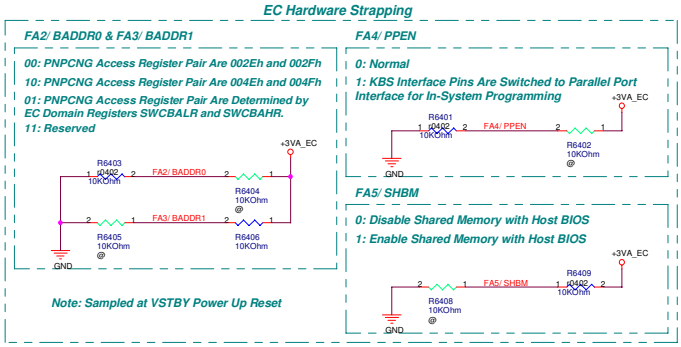


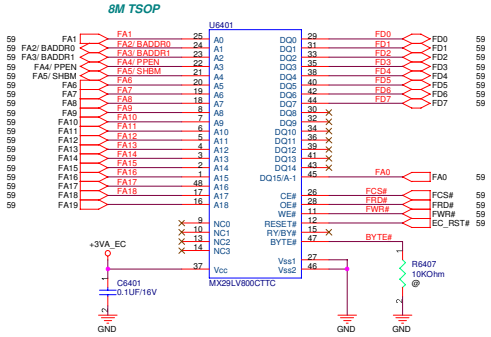


<Variant Name>

| | | |
|---|---|---|
| ASUS | Title : ISA ROM | |
| ASUSTeK COMPUTER INC. NB1 | Engineer: Gajun_Ho | |
| Size: Custom | Project Name: F3Sc | Rev: 2.0 |
| Date: 五月二十日 21, 2007 | Sheet 64 of 95 | |


<< Kennedy_Zhang >>

<Variant Name>

| | | |
|---|---|---|
| ASUSTeK COMPUTER INC. NB1 | Title : SPI ROM | |
| | Engineer: Gajun_Ho | |
| Size: Custom | Project Name: F3Sc | Rev: 2.0 |
| Date: 星期三, 二月 21, 2007 | Sheet 65 of 95 | |

<< Kennedy_Zhang >>

# For LED

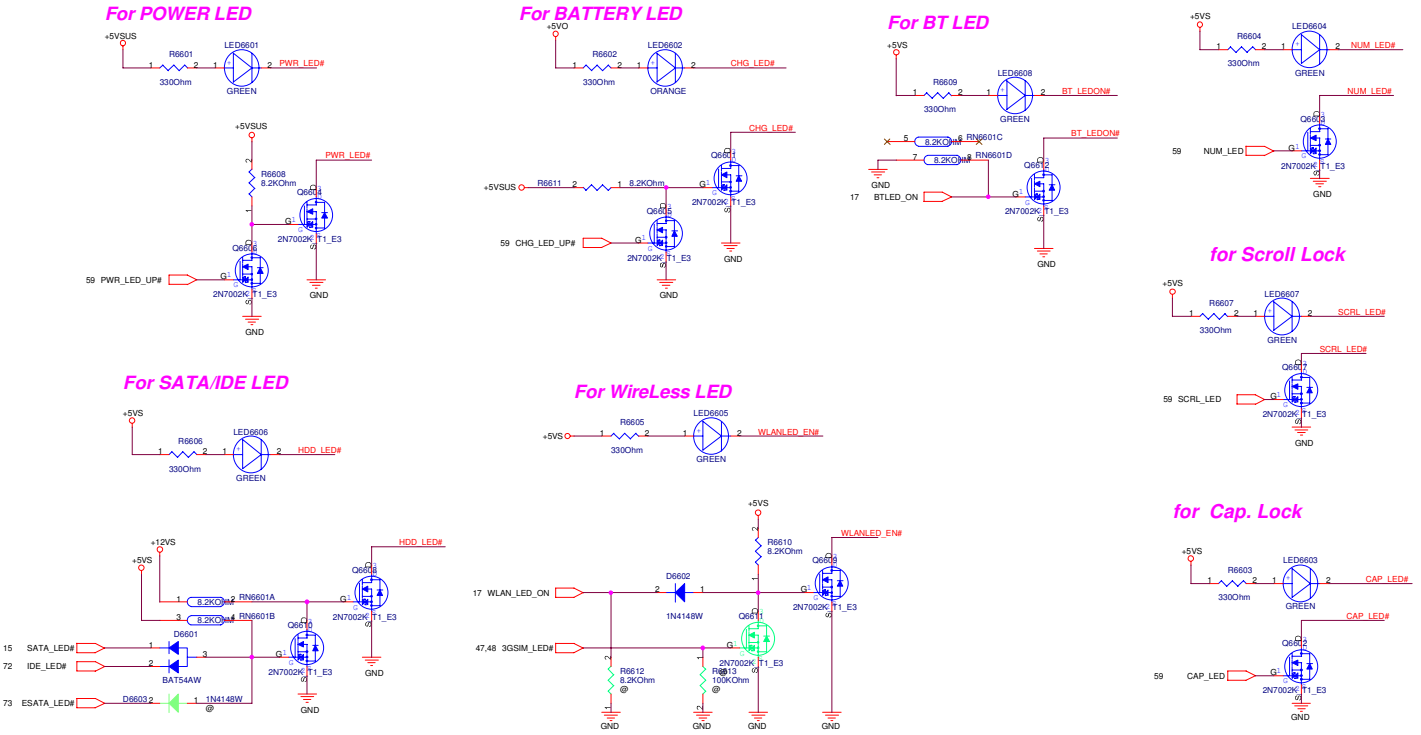


<Variant Name>

| | | |
|---|---|---|
| ASUSTeK COMPUTER INC | Title : LED | |
| | Engineer: Gajun_Ho | |
| Size: Custom | Project Name: F3Sc | Rev: 2.0 |
| Date: 月日, 年 21, 2007 | Sheet 66 of 95 | |

<< Kennedy_Zhang >>

<Variant Name>

| | | |
|---|---|---|
| ASUSTeK COMPUTER INC | Title : Schematic page name | |
| | Engineer: Gajun_Ho | |
| Size: Custom | Project Name: F3Sc | Rev: 2.0 |
| Date: 星期三, 十月 21, 2007 | Sheet 67 of 95 | |

<< Kennedy_Zhang >>

## DC IN

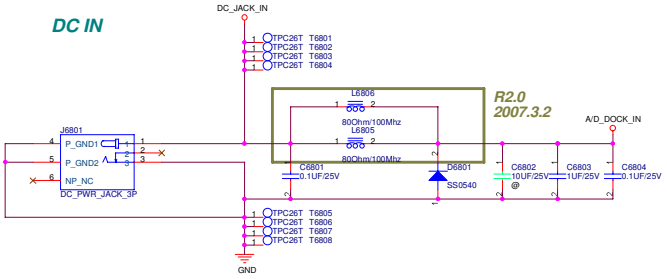


## BAT IN

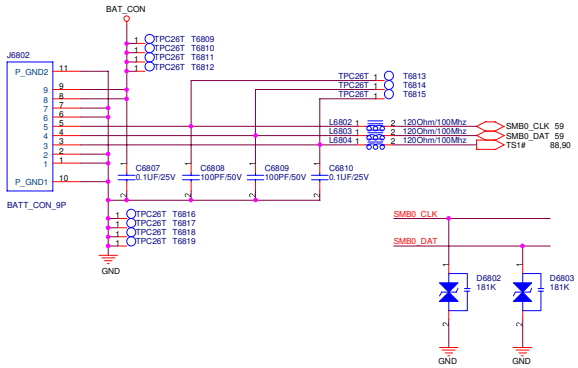


## Without Battery & Pull out Adapter

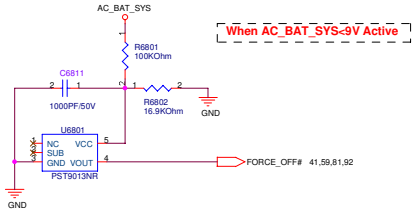


<Variant Name>

| | | |
|---|---|---|
| ASUSTeK COMPUTER INC. NB1 | Title : DC & BAT IN | |
| | Engineer: Gajun_Ho | |
| Size: Custom | Project Name: F3Sc | Rev: 2.0 |
| Date: 月日, 年月 21, 2007 | Sheet 68 of 95 | |


<< Kennedy_Zhang >>

<Variant Name>

| | | |
|---|---|---|
| ASUSTeK COMPUTER INC | Title : Schematic page name | |
| | Engineer: Gajun_Ho | |
| Size: Custom | Project Name: F3Sc | Rev: 2.0 |
| Date: 星期三, 十月 21, 2007 | Sheet 69 of 95 | |

<< Kennedy_Zhang >>

## For Debug

**If support NewCard Debug Card,**
**Pls don't mount all components.**

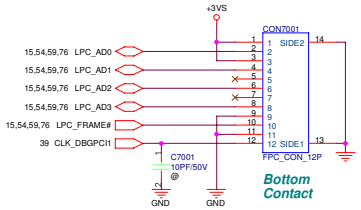


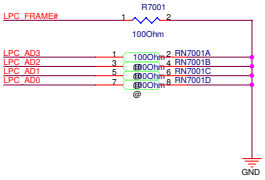


<Variant Name>

| | | |
|---|---|---|
| ASUSTeK COMPUTER INC | Title : Debug CONN. | |
| | Engineer: Gajun_Ho | |
| Size: Custom | Project Name: F3Sc | Rev: 2.0 |
| Date: 星期三, 二月 21, 2007 | Sheet 70 of 95 | |


<< Kennedy_Zhang >>

<Variant Name>

| | | |
|---|---|---|
| ASUSTeK COMPUTER INC | Title : Schematic page name | |
| | Engineer: Gajun_Ho | |
| Size: Custom | Project Name: F3Sc | Rev: 2.0 |
| Date: 星期三, 十月 21, 2007 | Sheet 71 of 95 | |

<< Kennedy_Zhang >>

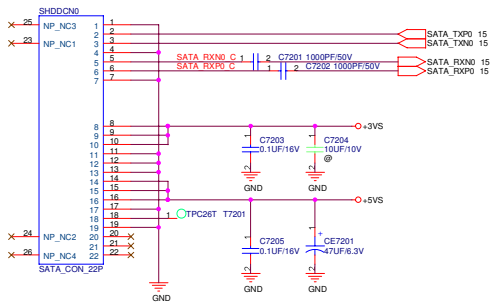


# SATA HDD

## ODD

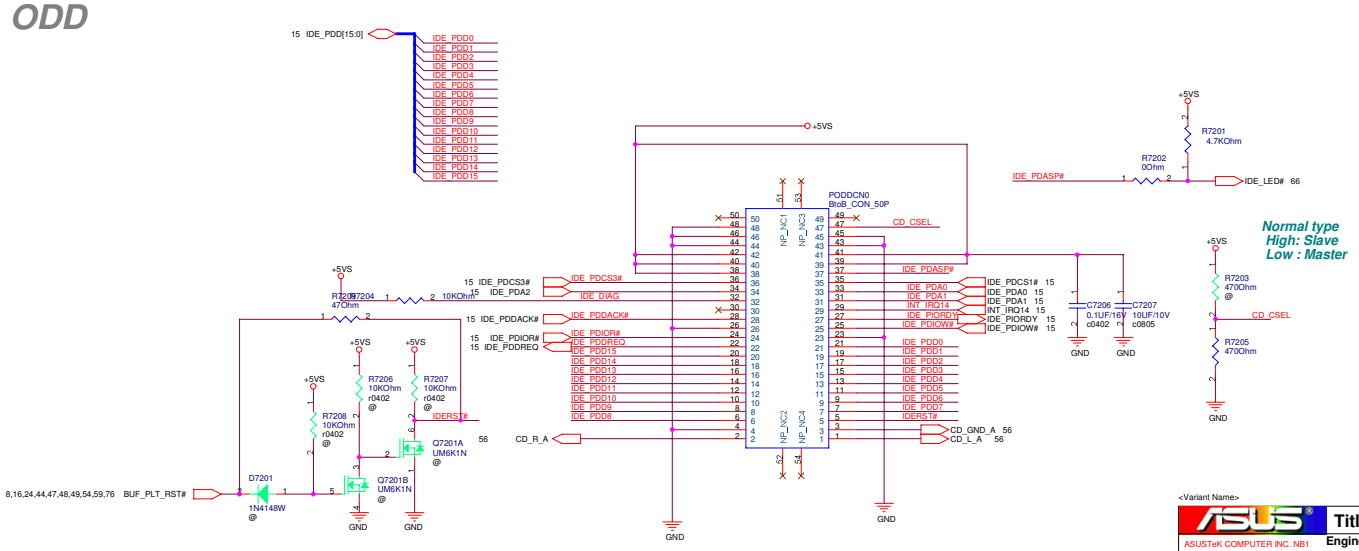


<Variant Name>

| | | |
|---|---|---|
| ASUSTeK COMPUTER INC. NB1 | Title : SATA-HDD & ODD | |
| | Engineer: Gajun_Ho | |
| Size: Custom | Project Name: F3Sc | Rev: 2.0 |
| Date: 星期三, 二月 21, 2007 | Sheet 72 of 95 | |

<< Kennedy_Zhang >>

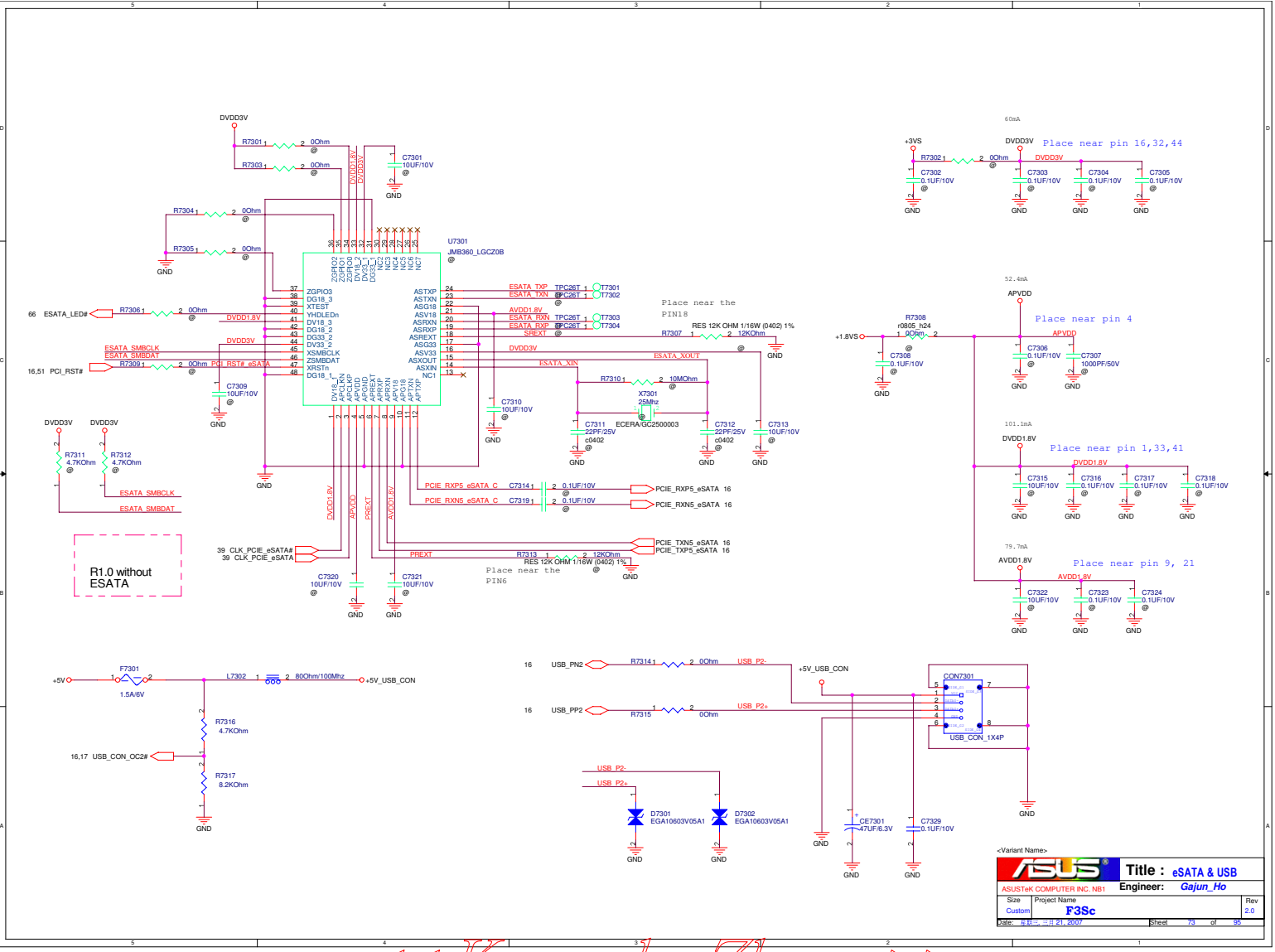


<< Kennedy_Zhang >>

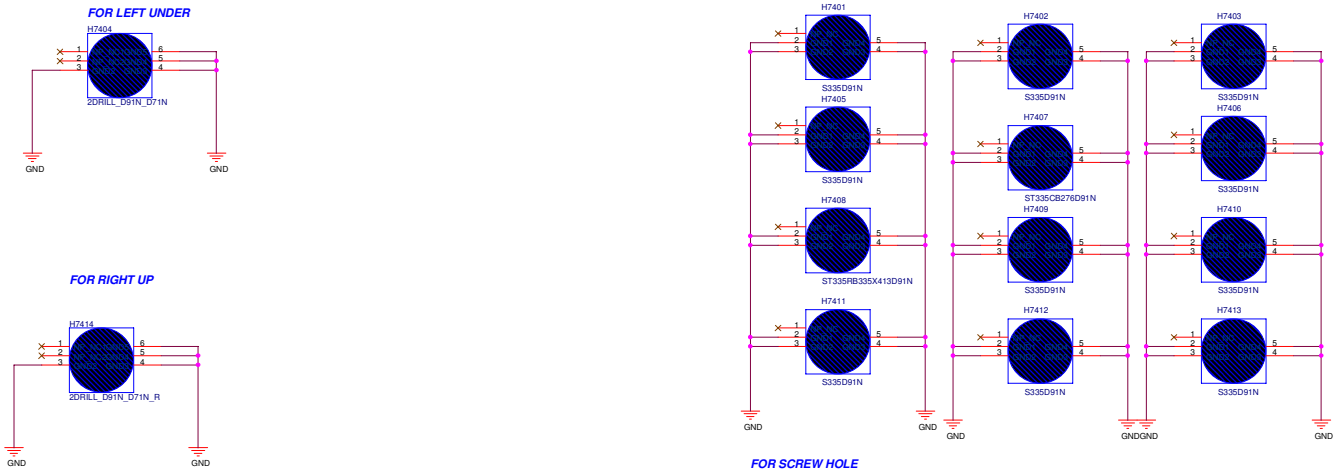


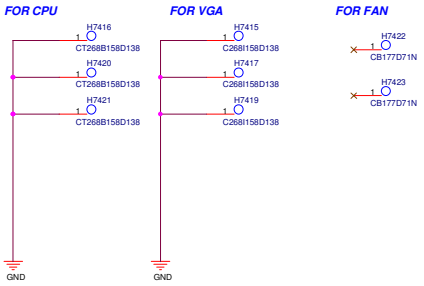


<Variant Name>

| | | |
|---|---|---|
| ASUS | Title : SREW HOLE | |
| ASUSTeK COMPUTER INC | Engineer: Gajun_Ho | |
| Size: Custom | Project Name: F3Sc | Rev: 2.0 |
| Date: 星期三, 二月 21, 2007 | Sheet 74 of 95 | |

<< Kennedy_Zhang >>

<Variant Name>

| | | |
|---|---|---|
| ASUSTeK COMPUTER INC | Title : Schematic page name | |
| | Engineer: Gajun_Ho | |
| Size: Custom | Project Name: F3Sc | Rev: 2.0 |
| Date: 星期三, 十月 21, 2007 | Sheet 75 of 95 | |

<< Kennedy_Zhang >>

## For TPM Module

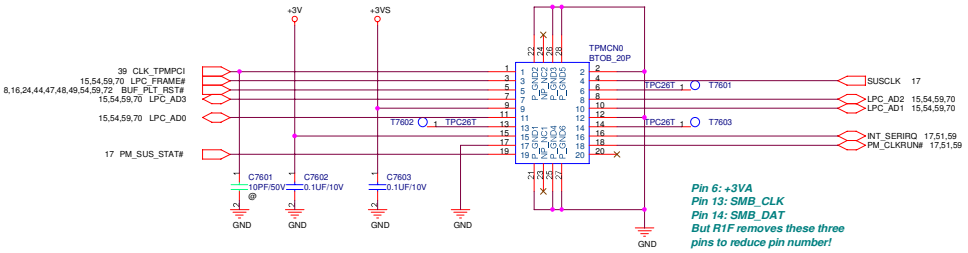


*Pin 6: +3VA*
*Pin 13: SMB_CLK*
*Pin 14: SMB_DAT*
*But R1F removes these three pins to reduce pin number!*

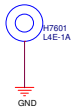


<Variant Name>

| | | |
|---|---|---|
| ASUSTeK COMPUTER INC | Title : TPM | |
| | Engineer: Gajun_Ho | |
| Size: Custom | Project Name: F3Sc | Rev: 2.0 |
| Date: 星期三, 三月 21, 2007 | Sheet 76 of 95 | |

<< Kennedy_Zhang >>

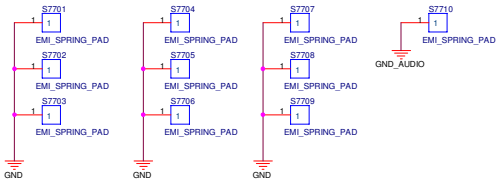


<Variant Name>

| | | |
|---|---|---|
| ASUSTeK COMPUTER INC | Title : SPRING_PAD | |
| | Engineer: Gajun_Ho | |
| Size: Custom | Project Name: F3Sc | Rev: 2.0 |
| Date: 月日, 年月 21, 2007 | Sheet 77 of 95 | |

<< Kennedy_Zhang >>

## For Bluetooth

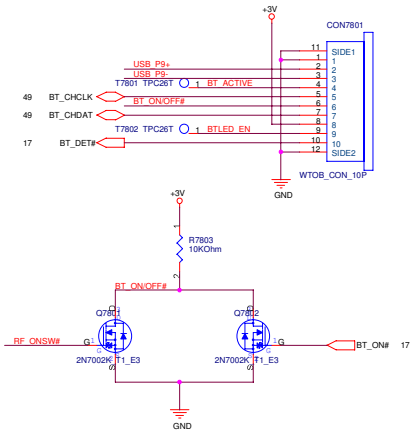


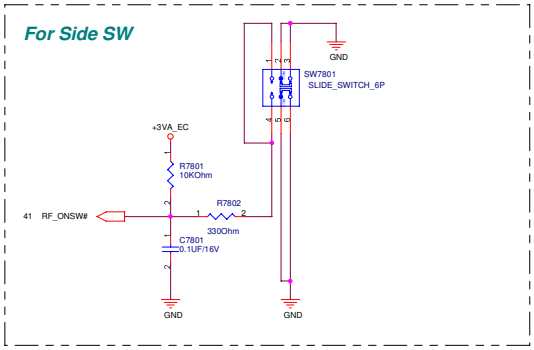

<Variant Name>

| | | |
|---|---|---|
| ASUSTeK COMPUTER INC | Title : Blue Tooth | |
| | Engineer: Gajun_Ho | |
| Size: Custom | Project Name: F3Sc | Rev: 2.0 |
| Date: 月日三, 三月 21, 2007 | Sheet 78 of 95 | |


<< Kennedy_Zhang >>

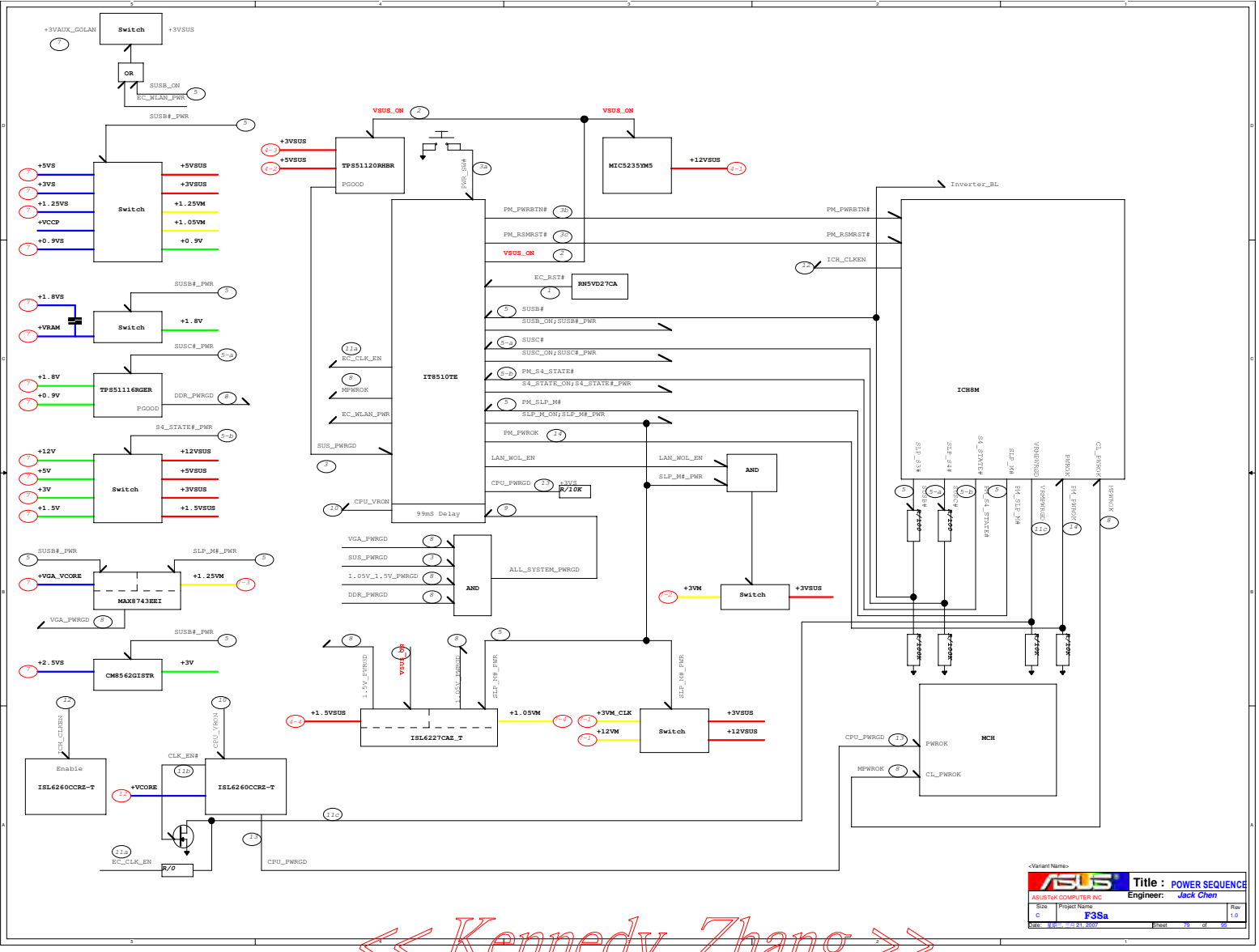


<< Kennedy_Zhang >>

<Variant Name>

ASUSTeK COMPUTER INC

Title : POWER SEQUENCE

Engineer: Jack Chen

| Size | Project Name | Rev |
|---|---|---|
| C | P3Sa | 1.0 |

Date: Monday, March 21, 2007 Sheet 79 of 95

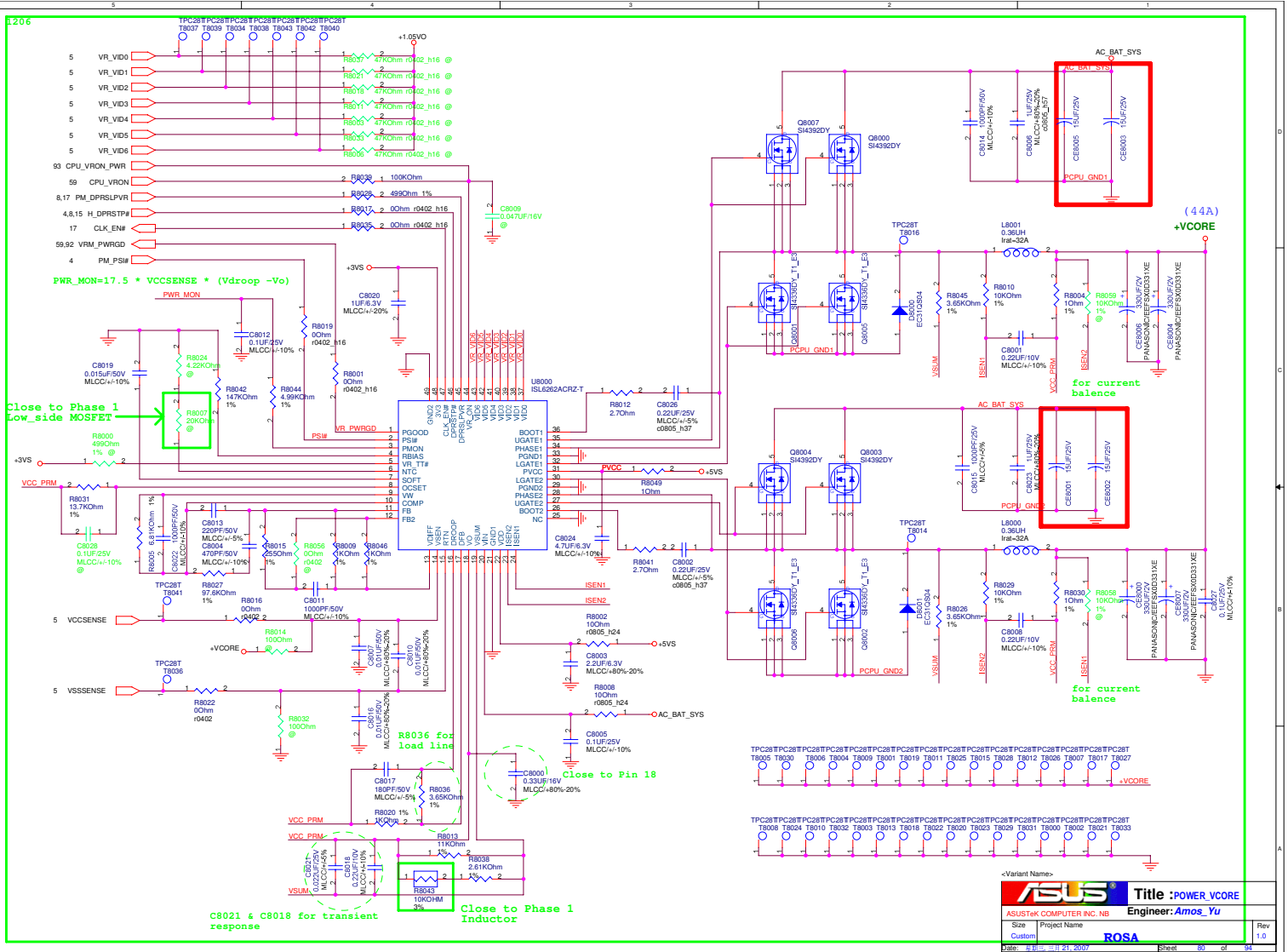


<< Kennedy_Zhang >>

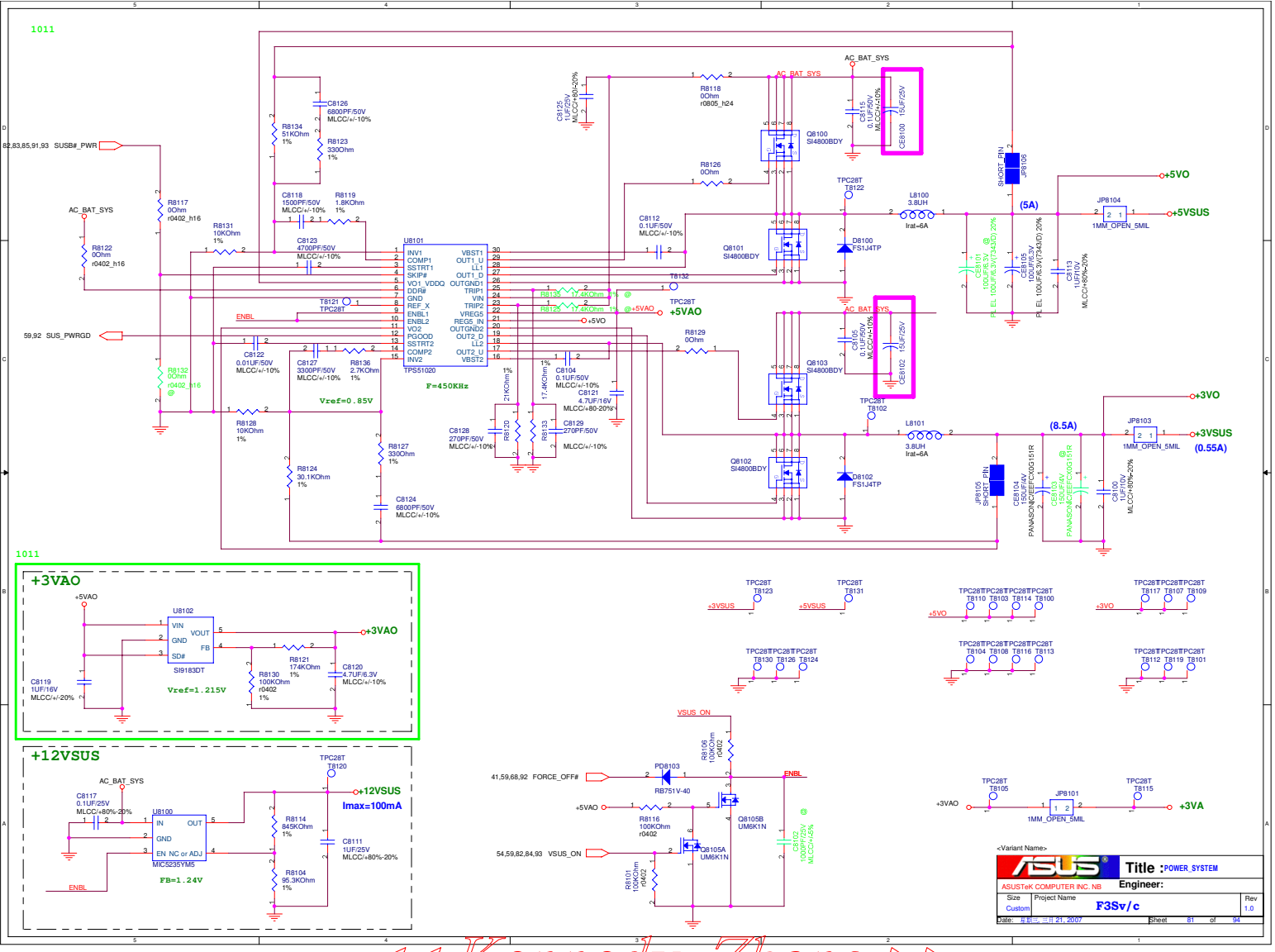


<< Kennedy_Zhang >>

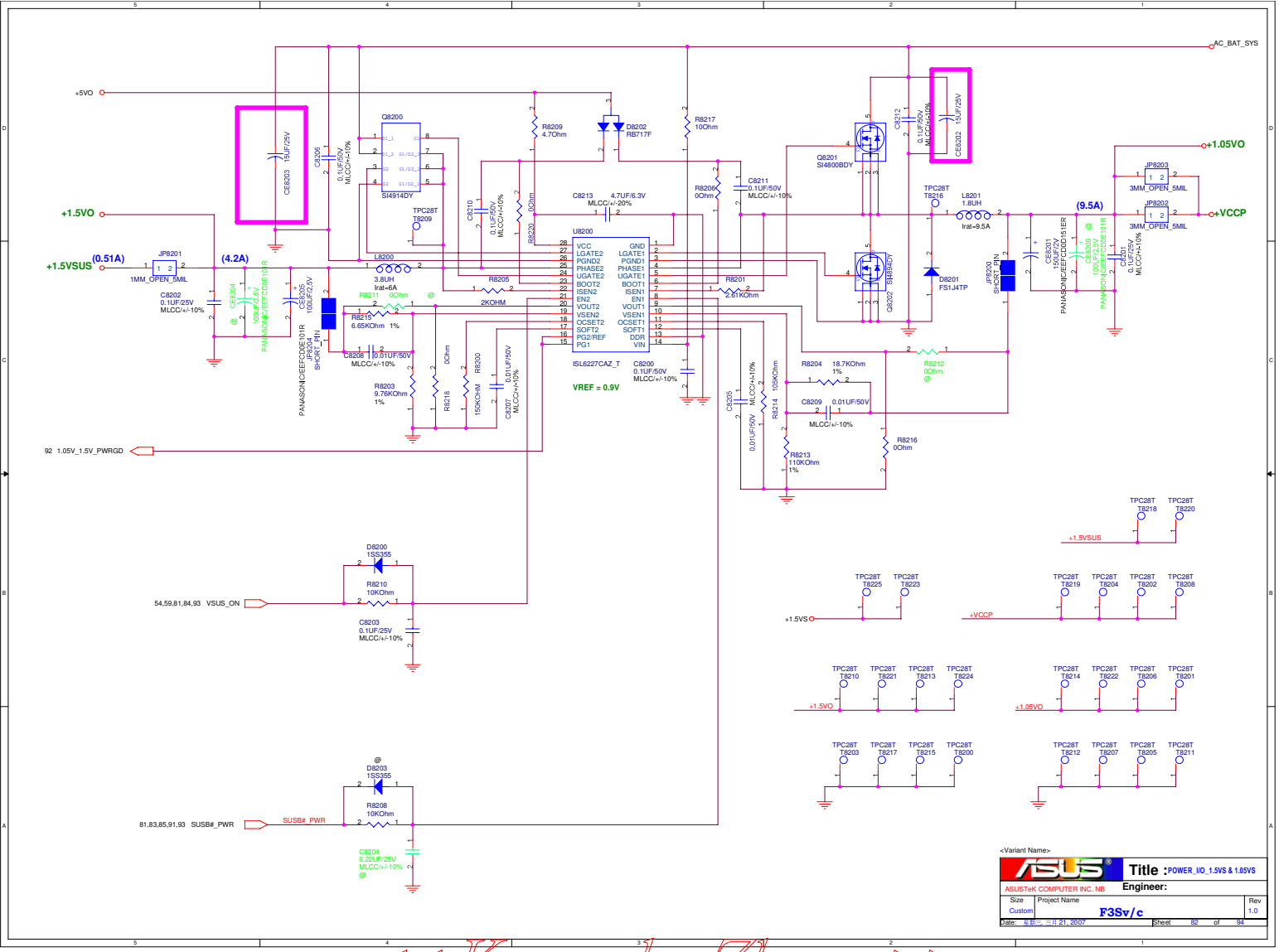


<Variant Name>

| | | |
|---|---|---|
| ASUS | Title : POWER_I/O_1.5VS & 1.05VS | |
| ASUSTeK COMPUTER INC. NB | Engineer: | |
| Size: Custom | Project Name: F3Sv/c | Rev: 1.0 |
| Date: 月日三, 二月 21, 2007 | Sheet 82 of 94 | |

<< Kennedy_Zhang >>

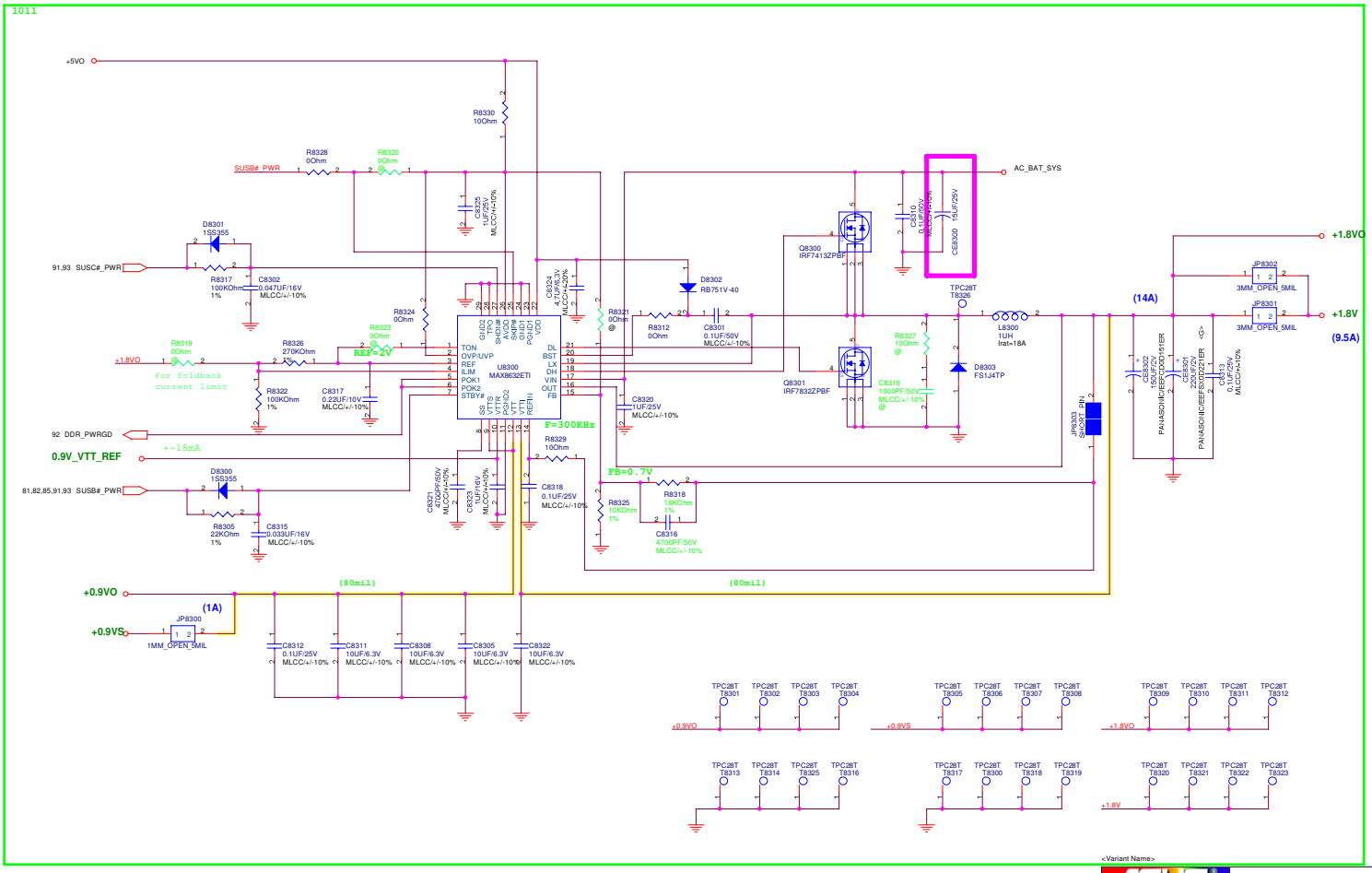


<Variant Name>

| | | |
|---|---|---|
| ASUSTeK COMPUTER INC. NB | Title : POWER_I/O_DDR & VTT | Engineer: |
| Size: Custom | Project Name: F3Sv/c | Rev: 1.0 |
| Date: 三10 ., ..日 21, 2007 | Sheet 83 of 94 | |

<< Kennedy_Zhang >>

## +2.5VS

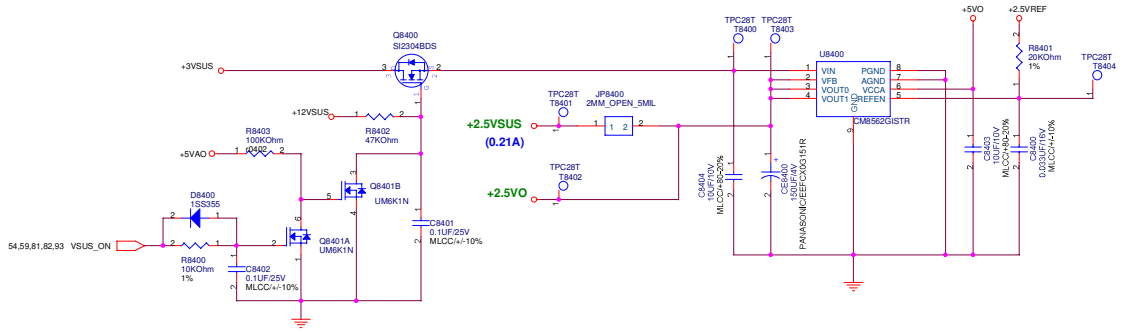


<Variant Name>

| | | |
|---|---|---|
| ASUSTeK COMPUTER INC. NB | Title : POWER_I/O_ +2.5VS | |
| | Engineer: | |
| Size: Custom | Project Name: F3Sv/c | Rev: 1.0 |
| Date: 月日三, 三月 21, 2007 | Sheet 84 of 94 | |

<< Kennedy_Zhang >>

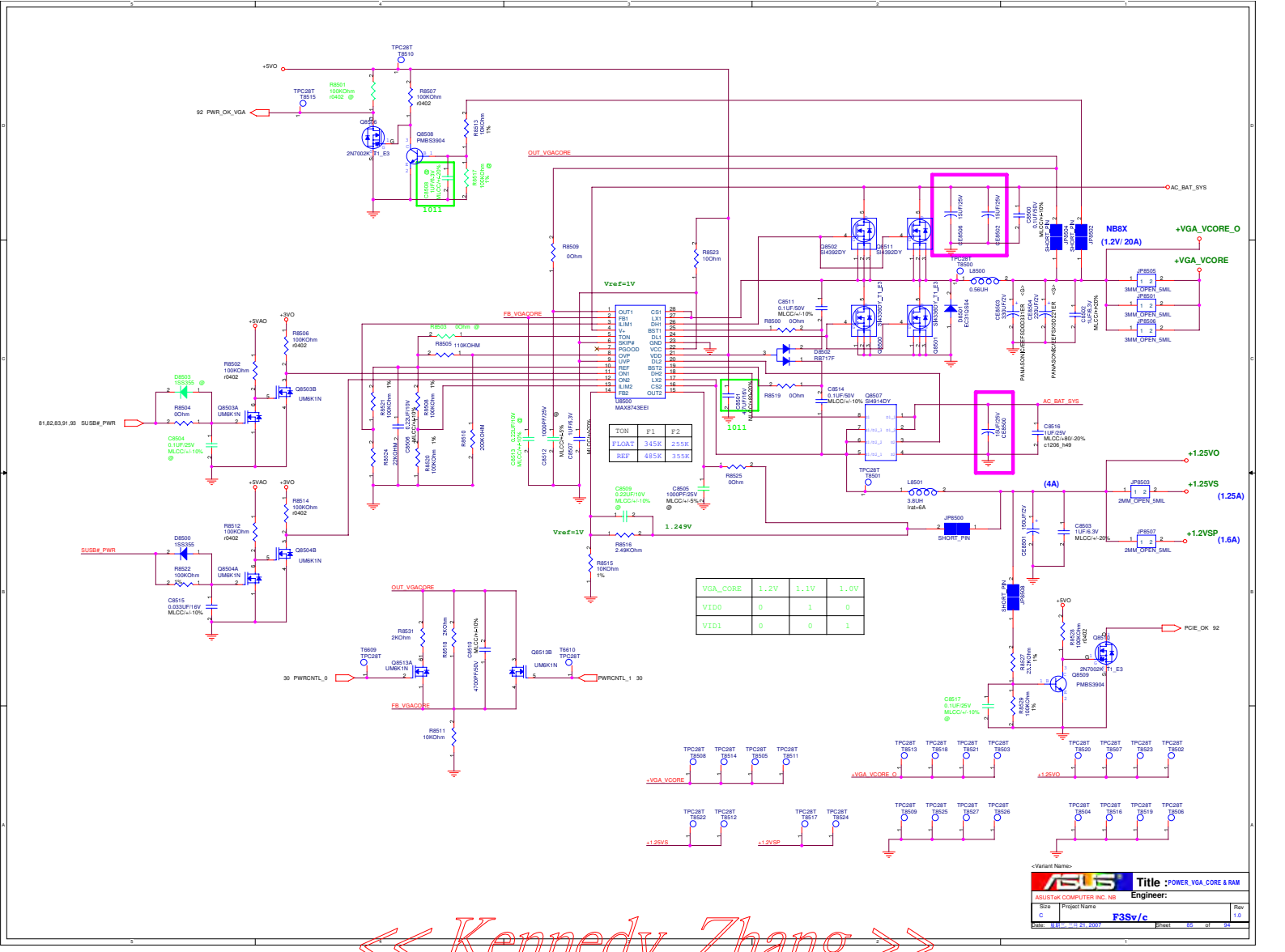


<< Kennedy_Zhang >>

<Variant Name>

| | | |
|---|---|---|
| ASUSTeK COMPUTER INC. NB | Title : N/A | |
| | Engineer: | |
| Size: B | Project Name: ROSA | Rev: 1.0 |
| Date: 星期一, 一月 21, 2007 | Sheet 86 of 94 | |

<< Kennedy_Zhang >>

<Variant Name>

| | | |
|---|---|---|
| ASUS | Title : POWER_SHUTDOWN# | |
| ASUSTeK COMPUTER INC. NB | Engineer: | |
| Size: Custom | Project Name: ROSA | Rev: 1.0 |
| Date: 星期三, 三月 21, 2007 | Sheet 87 of 94 | |

<< Kennedy_Zhang >>

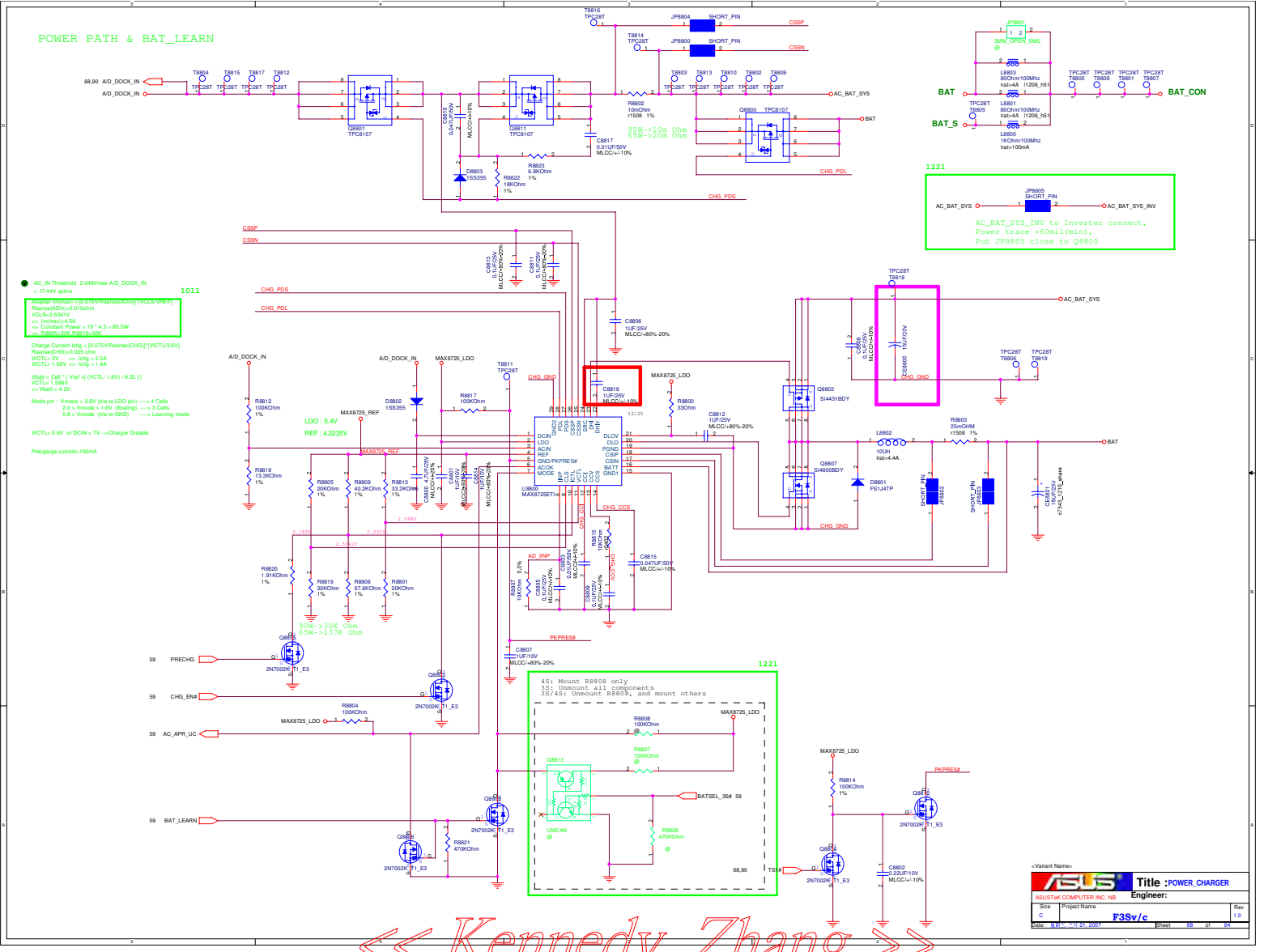


<< Kennedy_Zhang >>

<Variant Name>

| | | |
|---|---|---|
| ASUSTeK COMPUTER INC. NB | Title : N/A | |
| | Engineer: Amos_Yu | |
| Size: Custom | Project Name: ROSA | Rev: 1.0 |
| Date: 月日, 年月 21, 2007 | Sheet 89 of 94 | |

<< Kennedy_Zhang >>

## BATTERY IN DETECT

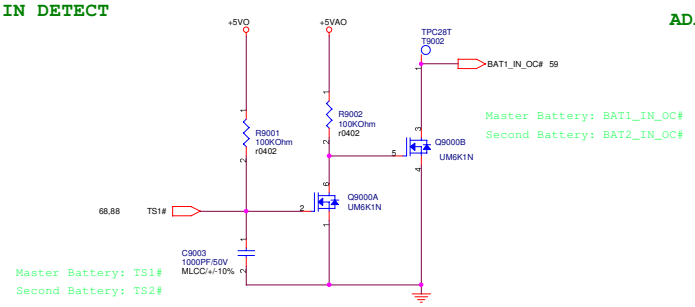


## ADAPTER IN DETECT

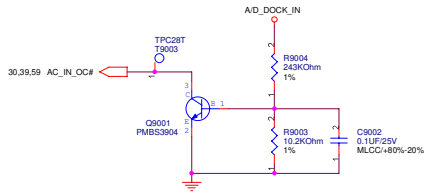


## +2.5VREF

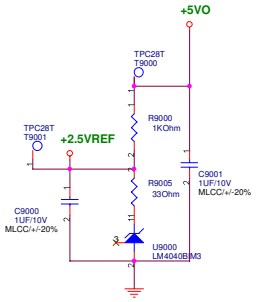


<Variant Name>

| | | |
|---|---|---|
| ASUS | Title : POWER_DETECT | |
| ASUSTeK COMPUTER INC. NB | Engineer: | |
| Size: Custom | Project Name: F3Sv/c | Rev: 1.0 |
| Date: 星期三, 二月 21, 2007 | Sheet 90 of 94 | |


<< Kennedy_Zhang >>

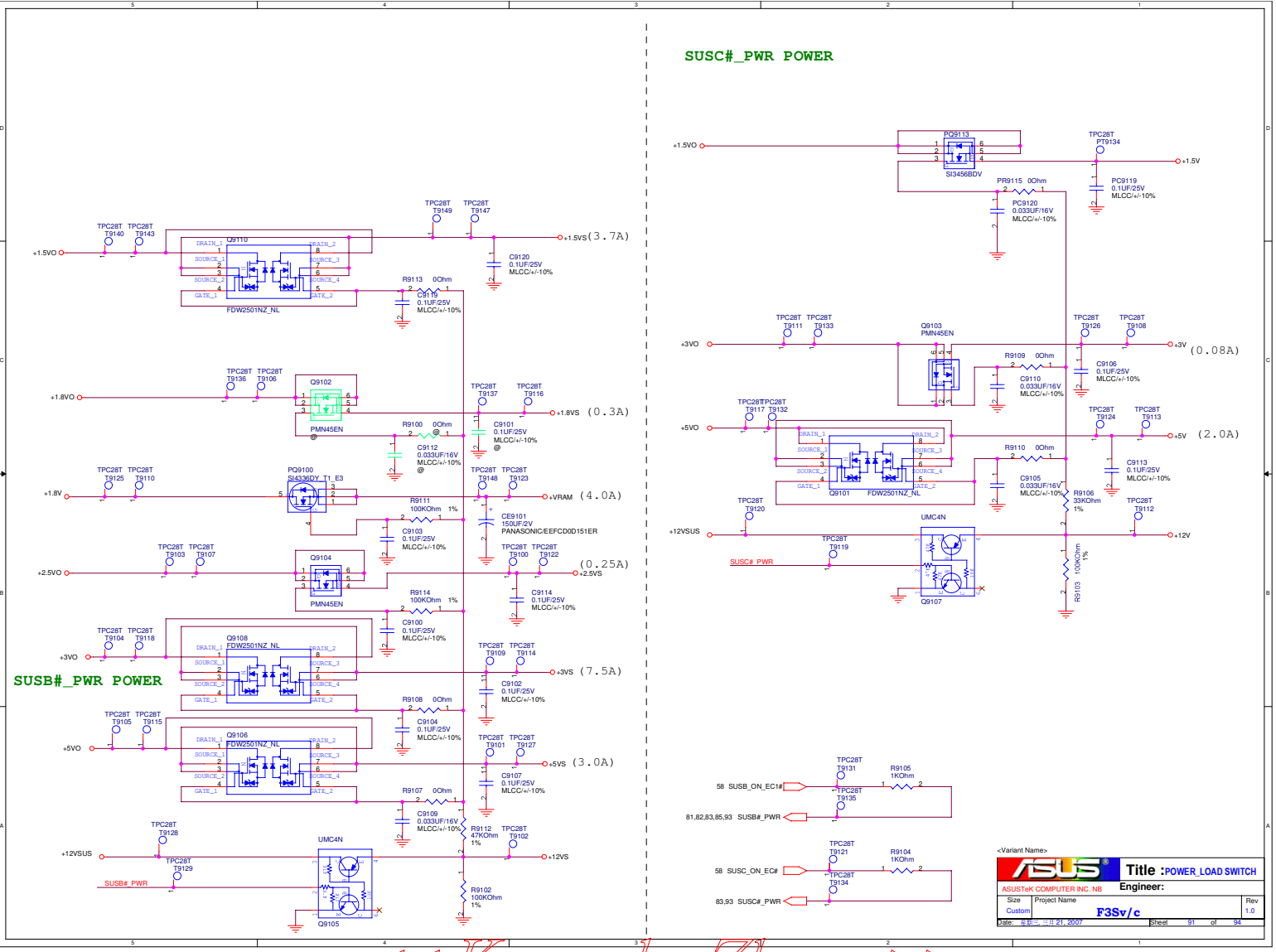


<< Kennedy_Zhang >>

## POWER GOOD DETECTER

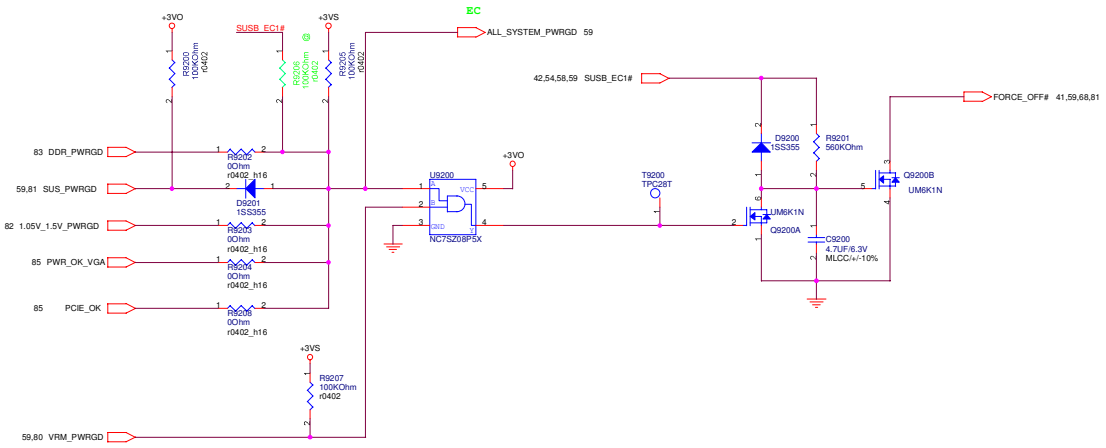


<Variant Name>

| | | |
|---|---|---|
| ASUS | Title : POWER_PROTECT | |
| ASUSTeK COMPUTER INC. NB | Engineer: | |
| Size: Custom | Project Name: F3Sv/c | Rev: 1.0 |
| Date: 月日, 二月 21, 2007 | Sheet 92 of 94 | |


<< Kennedy_Zhang >>

**FOR POWER TEST**

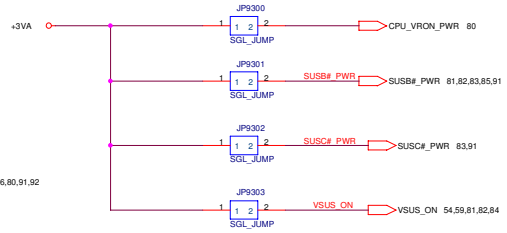


<Variant Name>

| | | |
|---|---|---|
| ASUS | Title : POWER_SIGNAL | |
| ASUSTeK COMPUTER INC. NB | Engineer: | |
| Size: Custom | Project Name: F3Sv/c | Rev: 1.0 |
| Date: 月日, 二月 21, 2007 | Sheet 93 of 94 | |

<< Kennedy_Zhang >>

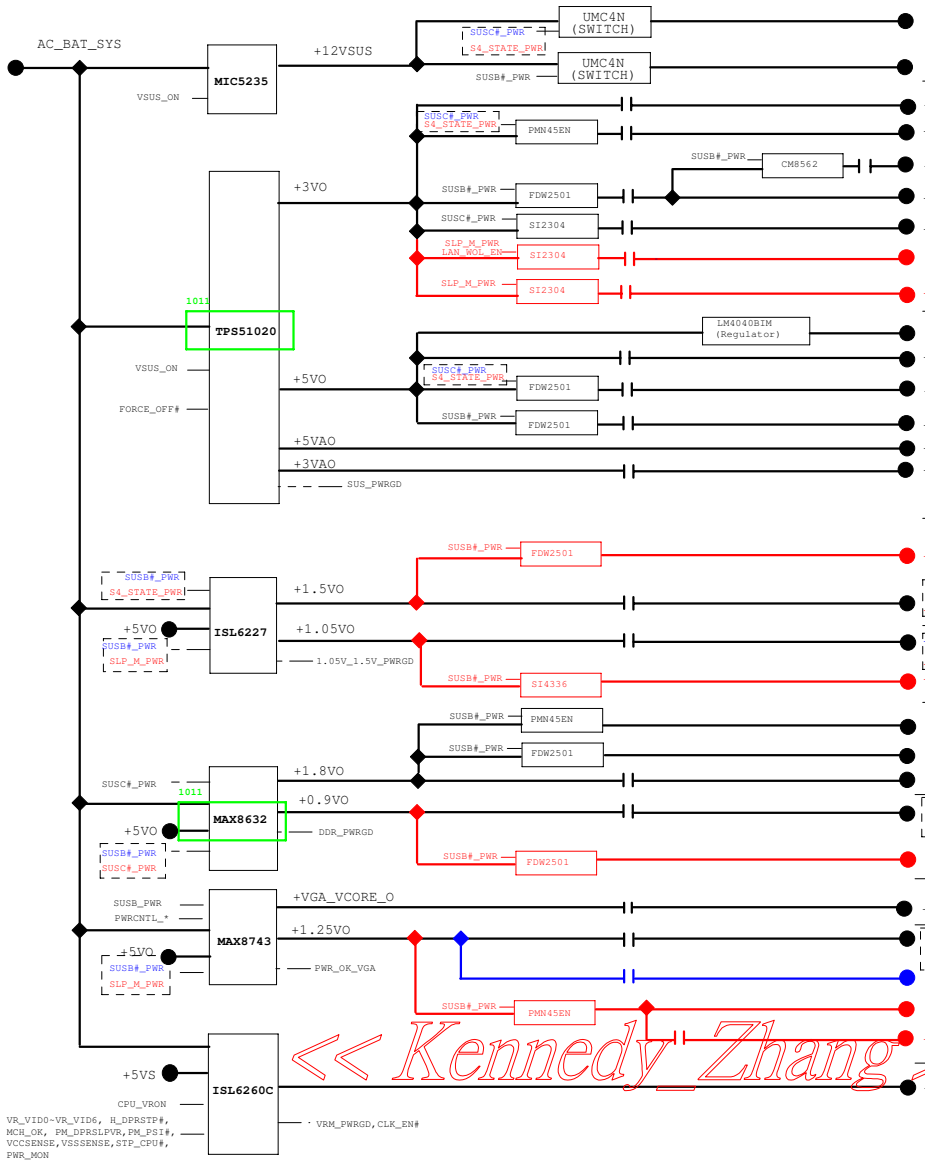


| | F3Sv/c Non-IAMT | V1S USE IAMT | Design rating |
|---|---|---|---|
| +12V | (10mA) | (10mA) | |
| +12VS | (10mA) | (10mA) | |
| +3VSUS | (0.525A) | (0.48A) | |
| +3V | (0.08A) | (1.31A) | |
| +2.5VS | (0.24A) | (0.11A) | |
| +3VS | (7.498A) | (6.46A) | (7.5A) |
| +3VSG | | (0.2A) | |
| +3VM | | (0.82A) | |
| +3VM_CLK | | (0.19A) | |
| +2.5VREF | (10mA) | (10mA) | |
| +5VSUS | (0.01A) | (0.01A) | |
| +5V | (2A) | (1.61A) | |
| +5VS | (3.047A) | (4.45A) | (6A) |
| +5VA | (0.001A) | (0.01A) | |
| +3VA | (0.209A) | (0.01A) | |
| +1.5VS | | (3.22A) | (2.6A) |
| +1.5VS | (3.685A) | | |
| +1.5V | | (0.2A) | |
| +VCCP | (9.851A) | (0.54A) | |
| +1.05VM | | | |
| +VCCP | | (7.31A) | (9.5A) |
| +1.8VS | | (0.26A) | |
| +VRAM | (4.3A) | (10.7A) | (9.5A) |
| +1.8V | (9.598A) | (8.5A) | |
| +0.9VS | (1A) | | |
| +0.9V | | (1A) | |
| +0.9VS | | (1A) | (2A) |
| +VGA_VCORE | (20A) | (20A) | M76 (20A) |
| +1.25VS | (1.85A) | | |
| +1.25VM | | (1.64A) | |
| +1.2VSP | (1.618A) | | |
| +1.25VS | | (0.75A) | (2.9A) |
| +1.2VSP | | (1.45A) | |
| +VCORE | (44A) | (44A) | |

<< Kennedy_Zhang >>

<Variant Name>

ASUSTeK COMPUTER INC. NB

Title : POWER_FLOWCHART

Engineer:

| Size | Project Name | Rev |
|---|---|---|
| Custom | F3Sv/c | 1.0 |

Date: 月 8, 一月 21, 2007 Sheet 94 of 94

| Rev | Date | Description |
|---|---|---|
| **1.0** | 2006/10/ | 1. Initial release. |
| **1.1** | 2006/12/28 | 1. Initial release. |

| Rev | Date | Description |
|---|---|---|
| | | |

<Variant Name>

ASUSTek COMPUTER INC

Title : History

Engineer: *Jack Chen*

| Size | Project Name | Rev |
|---|---|---|
| Custom | F3Sv | 1.0 |

Date: 星期三, 三月 21, 2007 Sheet 95 of 95

<< Kennedy_Zhang >>